Commercial Plumbing and Layout Guide

The Zurn PEX® Commercial Plumbing System

This manual is an addendum to the Zurn PEX Plumbing Installation Guide, ZPM07199. Its purpose is to provide customers with additional information relevant to 1-1/4", 1-1/2", and 2" Zurn PEX piping systems, herein referred to as "Commercial Plumbing System" that is not included in the Zurn PEX Plumbing Installation Guide. Unless specified otherwise, all information stated in the Zurn PEX Plumbing Installation Guide pertains to the Commercial Plumbing System. Prior to starting the installation of the Commercial Plumbing System, read thoroughly through this entire addendum, as well as the Zurn PEX Plumbing Installation Guide. The following information will be discussed in this addendum relevant to Zurn PEX Commercial Plumbing System:

- Tubing
- Fitting System
- Crimp System
- Installation
- System Sizing and Design
- Connection Detail
- Commercial Construction Techniques
- Fire Resistant Construction

Tubing

Note: For complete information regarding Zurn PEX tubing, refer to the Zurn PEX Plumbing Installation Guide or Zurn PEX Plumbing and Radiant Heating Product Catalog.

Zurn PEX Commercial Tubing Specifications

The following table is a list of large diameter Zurn PEX tubing that can be used in a commercial tubing system. Refer to the Zurn PEX Plumbing Installation Guide or Zurn PEX Plumbing and Radiant Heating Product Catalog for a complete list of Zurn PEX tubing.

Zurn PEX UV Resistance

Like most plastic materials, PEX is subject to UV deterioration and must not be exposed to sunlight, either direct or indirect. Outside storage is not recommended, but if necessary, the tubing must be covered with a material that will protect it from UV light. Failure to do so will void the warranty. However, in the circumstance that a project is delayed, Zurn PEX tubing has UV stabilizers that are designed to protect the tube for up to 6 months. However, it is good practice to minimize the exposure of the Zurn PEX tube to UV rays to as low a level as possible.

Zurn PEX Chlorine Resistance

PEX 5006 Designation – Generally a continuously circulating hot water plumbing loop @ 140°F.

Zurn PEX Temperature and Pressure Ratings

Zurn PEX tube has the following temperature and pressure ratings:

160 PSI at 73°F
100 PSI at 180°F
80 PSI at 200°F

Zurn PEX in Plenums

- Zurn PEX tube in sizes 1-1/4", 1-1/2", and 2" have been tested in general accordance with ASTM E84 with a resulting flame spread index of 0 and a smoke developed index of 15 when wrapped in 1/2" thick fiberglass insulation listed to ASTM E84 and supported every 24 inches.
- Zurn PEX tube in sizes up to 1" have been tested in Underwriters Laboratory in Canada in general accordance with UL 733/ASTM E84 (specifically ULCS102.2) with a resulting flame spread rating of 15 and smoke developed rating of 50 when installed at a minimum of 19.8" on center.

Zurn Designation	Nom. Size (CTS)	Avg. O.D.	Avg. I.D.	Min. Wall Thickness	Fluid Capacity Gal./Foot	Wt. Per 100' Lbs.
Q6P	1-1/4"	1.375"	1.054"	0.153"	0.045	26
Q7P	1-1/2"	1.625"	1.244"	0.181"	0.063	37
Q8P	2"	2.125"	1.629"	0.236"	0.108	60

Zurn Fitting Systems For Use in Commercial Applications

Zurn PEX is a relatively inert material and is therefore joined by mechanical connections. Zurn mechanical connections consist of an insert fitting and a clamp system to make the connection between the tubing and the fitting. To suit your installation needs, Zurn offers two choices for insert fittings – Zurn PEX XL and DZR, and Zurn PEX CR.

Zurn PEX Insert Fitting System

Insert fittings have a 30-year track record of reliability. With over 230 million fittings in service nationwide, the fitting system is the most widely used system in the industry. For more information concerning the fitting system, such as installation and tools, refer to the Zurn PEX Plumbing and Installation Guide. Refer to the Zurn PEX Plumbing and Radiant Heating Systems Product Catalog for a list of the types of fittings available.

Zurn PEX XL (1-1/4", 1-1/2", and 2"): Zurn PEX XL fittings are manufactured from a dezincification resistant low lead alloy called ECO BRASS®. It is compliant with low lead legislation in the states of California and Vermont and listed to the following standards:

- ASTM F877
- CAN/CSA B137.5
- NSF/ANSI Standard 14
- NSF/ANSI Standard 61, including Annex G

Zurn PEX DZR (1-1/4", 1-1/2", and 2"): 1-1/4", 1-1/2" and 2" brass fittings are manufactured using dezincification resistant (DZR) brass. These fittings are listed by NSF International as meeting the following standards:

- ASTM F877
- CAN/CSA B137.5
- NSF Standard 14
- NSF/ANSI Standard 61

Zurn PEX XL (1" and Smaller): Zurn PEX XL fittings are manufactured from a dezincification resistant low lead alloy called ECO BRASS®. It is compliant with low lead legislation in the states of California and Vermont and listed to the following standards:

- ASTM F877
- ASTM F1807
- CAN/CSA B137.5
- NSF/ANSI Standard 14
- NSF/ANSI Standard 61, including Annex G

Zurn PEX CR (1" and Smaller): Zurn PEX CR fittings are molded from a blend of highly engineered polymers. The inherent qualities of the polymers make Zurn PEX CR fittings highly resistant to chlorine and other chemicals present in potable water. Zurn PEX CR fittings are a superior alternative to metallic fittings in areas with localized aggressive water chemistries. For more information concerning the Zurn PEX CR Fitting System, such as installation and tools, refer to the Zurn PEX Plumbing and Installation Guide. Refer to the Zurn PEX Plumbing and Radiant Heating Systems Product Catalog for a list of the types of Zurn PEX CR fittings available.

Zurn PEX CR Sizes: Zurn PEX CR fittings are available in sizes up to and including 1".

Zurn PEX CR Fire Ratings: For information regarding Zurn PEX CR fire ratings, contact Zurn.

Burial of DZR and XL Brass Fittings: When it is necessary to bury a fitting directly in the soil, Zurn recommends protecting the fitting and crimp ring with a heat shrink sleeve, foam pipe insulation, or several layers of plastic film such as Saran™ Wrap. Tape can be used to keep the plastic layers in place, but the tape should not come into contact with the Zurn PEX tubing. It is recommended the fittings not be buried in concrete.

Zurn Crimp Systems For Use in Commercial Applications

Zurn offers three different crimp fitting systems; however, when dealing with large diameter tube (1-1/4", 1-1/2", and 2"), it is only feasible to use the Copper Crimp Ring System on the tubing. For more information concerning Zurn Crimp Systems, refer to the Zurn PEX Plumbing and Installation Guide.

Copper Crimp System

The Zurn Copper Crimp System has the following benefits:

- Proven system for over 30 years
- Available in all sizes of Zurn PEX tube
- Go/No-Go Gauge for easy checking
- 25-year system warranty when used with Zurn PEX tube

For more information concerning the Zurn Copper Crimp System such as tools, tool adjustment, installation instructions, listings, etc., refer to the Zurn PEX Plumbing and Installation Guide.

Making The Connection The Power Tool

Large diameter tubing (1-1/4", 1-1/2", and 2") crimps will be made using the following:

- Fitting (from Zurn) of the appropriate size.
- Copper crimp ring (from Zurn) of the appropriate size.
- Power tool (by others) to make the crimp connection with the appropriate sized crimp head (from Zurn, Part No. QBJ-6, 7, or 8). QBJ-6, 7, or 8 is compatible with the following Standard Tools: RIDGID® 330-B, Stanley® P204, Nibco® PC100, and Rothenberber ROMAX.
- Go/No-Go Gauge (from Zurn) to ensure a proper crimp. The crimp must be within the dimensional limits shown in the table below.

Tube Size	1-1/4"	1-1/2"	2"
Crimp Minimum Diameter	1.430"	1.685"	No Min.
Crimp Maximum Diameter	1.445"	1.700"	2.203"

Be sure to follow the Zurn PEX Plumbing Installation Guide for the procedure of making a crimp with a copper crimp ring and checking the crimp using the Go/No-Go Gauge.

Note: 2" has a "Go" Gauge only.

Making A Soldered Connection Near PEX

When soldering near a Zurn PEX connection such as a copper stub elbow, the installer should take proper precautions to keep the Zurn PEX connection cool while soldering. There are three ways this can be done:

1. Make the solder connection prior to the crimp connection, making sure the pipe has cooled.
2. Wrapping the connection with a cold wet rag.
3. Applying an aerosol "spray type" spot freezing product to the copper.

Note: Placement of copper crimp ring from shoulder.

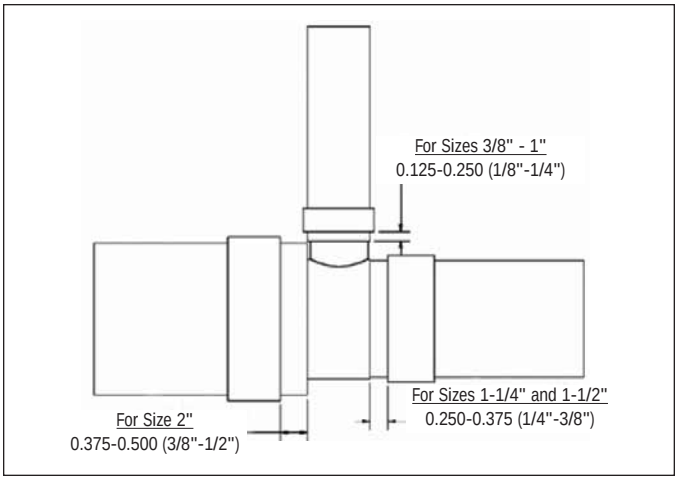

This spacing generally centers the crimp ring over the ribs of the fitting.

Large Diameter Compact Copper Crimp Tool Operating Instructions (QCRTLDM)

Cutting Zurn PEX Tubing

Step 1: Measure and cut the tube. Be sure you have a square burr-free cut. An uneven or jagged cut may cause an improper connection.

Install Copper Crimp Ring

Step 2: Next, slip a copper crimp ring onto the tube.

Install Fitting

Step 3: Now insert the fitting into the tube up to the fitting shoulder. The copper crimp ring should be positioned 1/4"-3/8" from the end of the tube for 1-1/4"-1-1/2" Zurn PEX tube and 3/8"-1/2" from the end of the tube for 2" Zurn PEX tube.

Crimping

Step 4: Load fitting assembly into the tool. Position the tool so the crimp ring is completely covered by the tool jaws. Confirm the tubing is at a 90° angle to the fitting and close jaw. Hand tighten the nut to hold fitting assembly in place.

Step 5: Drive the nut down with an impact wrench until blue LED light turns on.

Checking

Step 6: Check crimp using the supplied “GO Gauge.”

Jaw Installation Instructions

Step 1: Open clamp, then press down on the keyed slot to loosen jaw.

Step 2: Continue to hold in the keyed slot, turn tool around and move key out of position. Remove jaw from clamp.

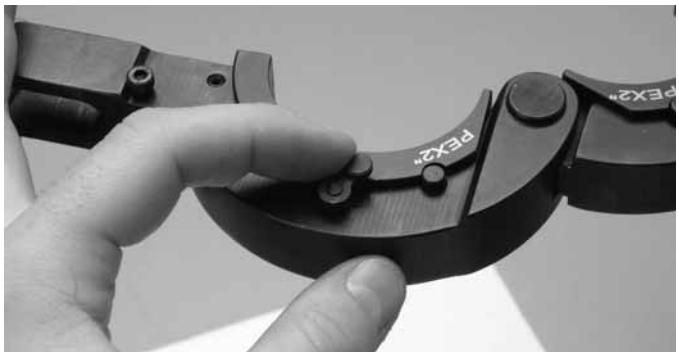

Step 3: Insert new crimping jaw.

Step 4: Rotate key back into position until key clicks to lock jaw in place. Repeat for other jaw.

Zurn PEX Tubing Installation For Commercial Systems

There are several key points that must be considered when installing Zurn PEX tubing in a commercial plumbing system. This section will list these points, which will include supporting Zurn PEX tubing, penetrating metal studs, tubing expansion and contraction, bending Zurn PEX, and insulation. **Note:** This section lists only certain items that must be taken into consideration when installing Zurn PEX in a commercial system. For complete installation instructions, the installer must refer to the Zurn PEX Plumbing and Application Guide.

Supporting Zurn PEX Tube

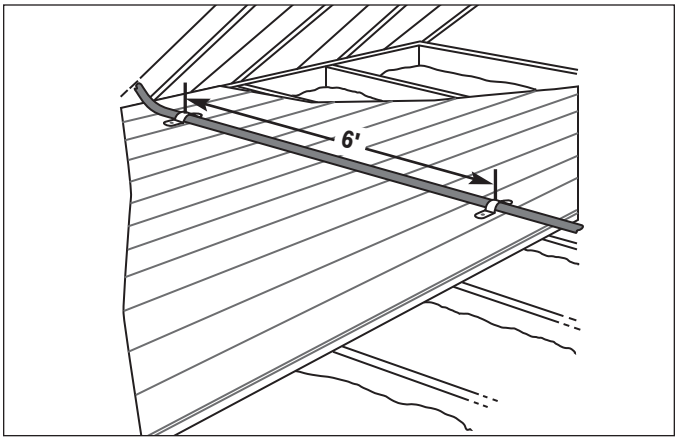

Straps can be 6 feet apart if the tube is continuously supported.

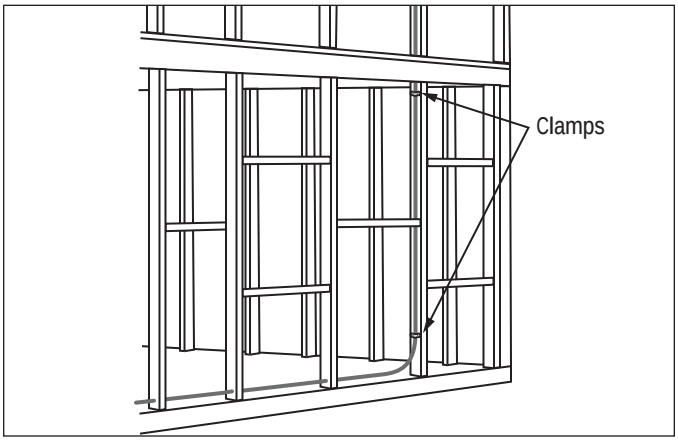

Vertical runs need supported on every floor. Depending upon the type of construction method being utilized, mid-story guides may be required (see section on Commercial Construction Methods).

Hanger Recommendations: There are numerous manufacturers who produce the accessories needed to hang/support piping in large diameter tubing systems. Below is a list of companies (in no particular order) that Zurn is aware of who produce these accessories. Contact the manufacturer for details on installation with Zurn PEX tubing.

- Cooper B-Line
- Holdrite®
- Sioux Chief
- PHD Manufacturing

It is critical that all hangers are free of sharp edges to prevent damaging the tubing.

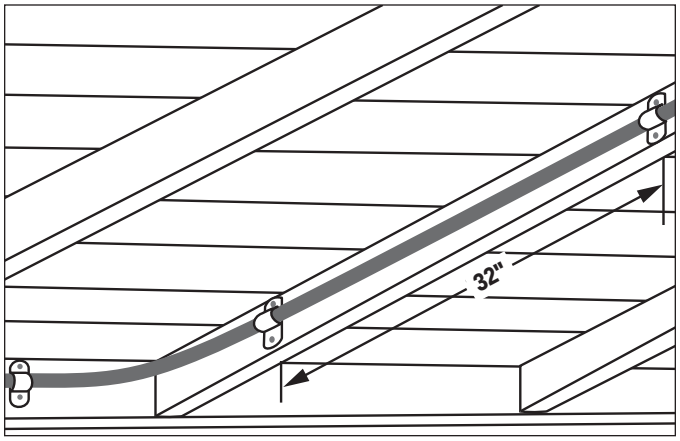

Straps can be 32 inches apart maximum in a horizontal run.

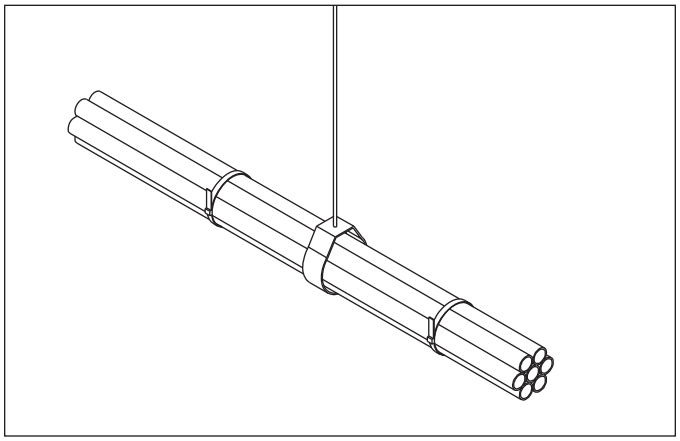

When supporting a tube bundle, use a strap to support an entire bundle.

Thermal Expansion and Hangers: Hangers and supports shall be firm, but loose enough to allow the tube to move back and forth as it expands and contracts. See figure below.

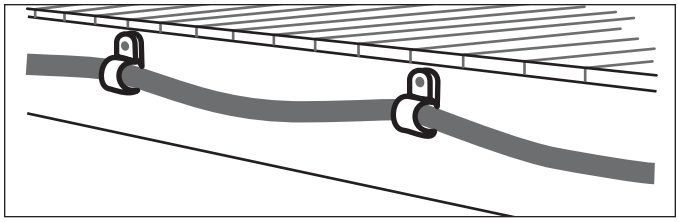

Metal Studs and Zurn PEX Tubing

It is possible during commercial construction that metal studs may be utilized. Protective sleeves or bushings should be used when penetrating metal studs. Sleeves and bushings are not required when penetrating ordinary wood or particle board if the holes are at least 1/8" larger than the tube size and tube movement is not restricted.

Zurn PEX Thermal Expansion and Contraction

All materials expand and contract with change in temperature. Plastics typically expand and contract more than metals for a given change in temperature. This must be considered when installing Zurn PEX tube.

In most cases, particularly with sizes 1" or less, expansion and contraction can be compensated for by installing the tubing with slack. Do not pull Zurn PEX tubing tight during installation. Allow an extra 1/8" per foot of tube length when cutting the tube. This should cover a temperature differential (installation temperature to use temperature) from 35°F to 165°F or Δ130°F.

Special attention to expansion and contraction is required when the plumbing system has fixed points where movement cannot be allowed. Examples of fixed points include fire-rated wall penetrations (excessive movement can damage the fire stop or fittings that must stay in a specific location to align with fixture or openings in the structure).

Expansion Loop/Arm: In the circumstance that slack cannot be incorporated into the plumbing line, an expansion loop or an expansion arm must be installed in the line. There are some general guidelines that must be followed when using expansion loops and arms.

- Expansion loops and expansion arms should be installed every 50 feet of straight length tubing.
- Expansion loops and expansion arms should be installed at the midpoint of two fixed points.

Note: An expansion loop/arm may not be required if there are no fixed points or restraining devices, such as the penetration of a fire rated assembly.

Expansion Arm Example: When utilizing an expansion arm, the longitudinal thermal expansion also must be taken into account. This can be done by placing the support clamps a sufficient distance away from the wall. Also, the flexible arm should be of sufficient length so the tubing cannot be damaged. Use the formula, figure, and table below to calculate the minimum length of an expansion arm:

$$L_B = 12 \times \sqrt{D \times \Delta L}$$

Where: L_B – Flexible Arm (inches)

D – Outside Diameter of Tubing (inches)

L – Tube Length (inches)

For all temperatures within the range of Δ130°F, the thermal expansion of the Zurn PEX tubing is 1/8" per foot. Therefore, the following equation can be concluded:

$$\Delta L = L \times 0.125$$

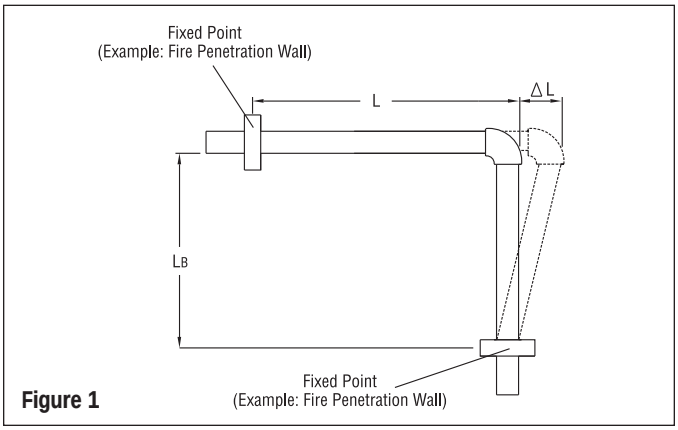

Figure 1

Table 1: Expansion Arm Chart (ΔT up to 130°F)

1-1/4" Zurn PEX		1-1/2" Zurn PEX		2" Zurn PEX	
L (Length of Run) Feet	L_B (Inches)	L (Length of Run) Feet	L_B (Inches)	L (Length of Run) Feet	L_B (Inches)
2	7.04	2	7.65	2	8.75
4	9.95	4	10.82	4	12.37
6	12.19	6	13.25	6	15.15
8	14.07	8	15.30	8	17.49
10	15.73	10	17.10	10	19.56
12	17.23	12	18.73	12	21.42
14	18.61	14	20.24	14	23.14
16	19.90	16	21.63	16	24.74
18	21.11	18	22.95	18	26.24
20	22.25	20	24.19	20	27.66
22	23.33	22	25.37	22	29.01
24	24.37	24	26.50	24	30.30
26	25.37	26	27.58	26	31.54
28	26.32	28	28.62	28	32.73
30	27.25	30	29.62	30	33.87
32	28.14	32	30.59	32	34.99
34	29.01	34	31.54	34	36.06
36	29.85	36	32.45	36	37.11
38	30.67	38	33.34	38	38.12
40	31.46	40	34.21	40	39.12
42	32.24	42	35.05	42	40.08
44	33.00	44	35.87	44	41.02
46	33.74	46	36.68	46	41.95
48	34.47	48	37.47	48	42.85
50	35.18	50	38.24	50	43.73

Expansion Loop Example: Calculating an expansion loop is very similar to calculating an expansion arm, in the sense that it uses a similar equation, and the result is determining the minimum lengths for the loop. The equation for the bottom portion ($L1$) of the expansion loop is shown:

$$L1 = \frac{12 \times \sqrt{D \times \Delta L}}{5}$$

The two sides ($L2$) of the expansion loop must be at least twice as long as the bottom ($L1$); therefore, the following equation can be derived:

$$(L2) = L1 \times 2$$

Once again, for all temperatures within the range of Δ130°F, the thermal expansion of the Zurn PEX tubing is 1/8" per foot. Therefore, the following equation can be concluded:

$$\Delta L = L \times 0.125$$

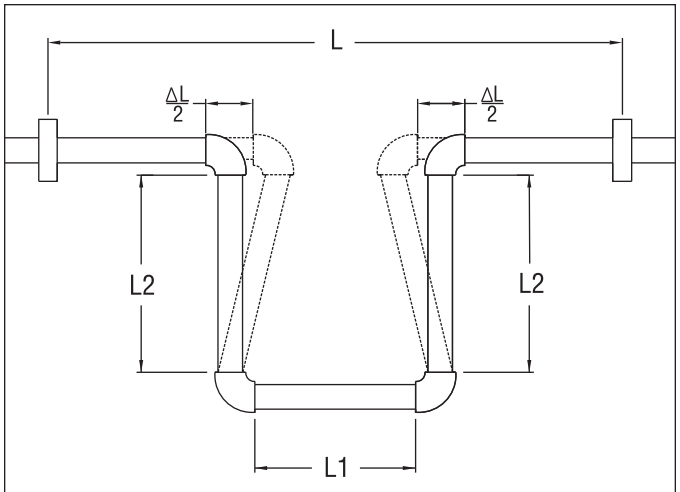

Figure 2

Table 2: Expansion Loop Chart (ΔT up to 130°F)

1-1/4" Zurn PEX			1-1/2" Zurn PEX			2" Zurn PEX		
L (Length of Run) Feet	L1 Inches	L2 Inches	L (Length of Run) Feet	L1 Inches	L2 Inches	L (Length of Run) Feet	L1 Inches	L2 Inches
6	2.44	4.87	6	2.65	5.30	6	3.03	6.06
8	2.81	5.63	8	3.06	6.12	8	3.50	7.00
10	3.15	6.29	10	3.42	6.84	10	3.91	7.82
12	3.45	6.89	12	3.75	7.49	12	4.28	8.57
14	3.72	7.45	14	4.05	8.09	14	4.63	9.26
16	3.98	7.96	16	4.33	8.65	16	4.95	9.90
18	4.22	8.44	18	4.59	9.18	18	5.25	10.50
20	4.45	8.90	20	4.84	9.67	20	5.53	11.06
22	4.67	9.33	22	5.07	10.15	22	5.80	11.60
24	4.87	9.75	24	5.30	10.60	24	6.06	12.12
26	5.07	10.15	26	5.52	11.03	26	6.31	12.61
28	5.26	10.53	28	5.72	11.45	28	6.55	13.09
30	5.45	10.90	30	5.92	11.85	30	6.77	13.55
32	5.63	11.26	32	6.12	12.24	32	7.00	13.99
34	5.80	11.60	34	6.31	12.61	34	7.21	14.42
36	5.97	11.94	36	6.49	12.98	36	7.42	14.84
38	6.13	12.27	38	6.67	13.34	38	7.62	15.25
40	6.29	12.59	40	6.84	13.68	40	7.82	15.65
42	6.45	12.90	42	7.01	14.02	42	8.02	16.03
44	6.60	13.20	44	7.17	14.35	44	8.20	16.41
46	6.75	13.50	46	7.34	14.67	46	8.39	16.78
48	6.89	13.79	48	7.49	14.99	48	8.57	17.14
50	7.04	14.07	50	7.65	15.30	50	8.75	17.49

Bending Zurn PEX

The minimum bend radius for Zurn PEX tubing is 6 times the outside diameter of the tubing, when bending it with the natural curvature of the coil. If bending against the coil, the minimum radius must be multiplied by 3.

Tubing Size	Outside Diameter	Minimum Bend Radius (With Curvature of Coil)	Minimum Bend Radius (Against Curvature of Coil)
1-1/4"	1.375"	8.25"	24.75"
1-1/2"	1.625"	9.75"	29.25"
2"	2.125"	12.75"	38.25"

Insulation

Zurn PEX is resistant to freeze damage; however, installation specific variables can affect the performance of the system if it is allowed to freeze up. In general, plumbing codes specify that tubing run through attics and exterior walls should be insulated. As such, Zurn PEX tubing should be insulated according to code requirements. Insulation that is typically used in copper and CPVC installations would provide equivalent protection for Zurn PEX tubing.

Note: When using expanding foam to insulate tubing, please contact Zurn for recommendations. While many expanding foams have been tested and have shown no adverse effects to PEX tubing, Zurn cannot guarantee all foams are the same.

Pressure Testing

All Zurn PEX systems must be pressure tested in accordance with local codes.

Pressure Testing With Water: If water is used for pressure testing and the building is unheated, the system should be drained after testing to prevent freezing. Test pressure shall be at least equal to normal operating pressure but not less than 40 psi and not more than 225 PSI. Test duration should not be less than 15 minutes.

Pressure Testing With Air: If air is used for pressure testing, use a pressure no less than 40 PSI but not more than 125 PSI. The most common test pressure is 100 PSI. The system shall be tested for a minimum of 15 minutes and the pressure shall not drop more than 8 PSI in one hour. This is due to initial deformation of tube followed by slow expansion. Should the system lose over 8 PSI in one hour, repressurize and test again. Should the problem persist, use one of the soapy solutions below for leak detection. Replace the fitting and retest.

Leak Detection: Zurn PEX recommends the use of ultrasonic leak detection instruments with air tests because they do not require the use of chemical solutions and they are quicker. If you choose to use a liquid leak detector, Zurn PEX recommends the use of a diluted solution comprising of 2 ounces per gallon using any of the following three dishwashing detergents:

1. Ultra Palmolive® Original Scent
2. Joy® Dishwashing Detergent
3. Wal-Mart® Dish Detergent

This recommendation applies only to Zurn PEX systems using Zurn PEX CR polymer insert fittings, Zurn PEX XL low lead brass fittings, or Zurn PEX DZR insert fittings.

- **Do Not** use this solution on other manufacturer's plumbing system components unless approved by the component manufacturer.
- **Do Not** use a full strength dishwashing detergent on Zurn PEX plumbing or heating systems.
- Zurn PEX®, Inc. will not honor warranty claims caused by the effects of other leak detectors or chemicals applied to Zurn PEX systems.

Large Diameter Cold Weather Crimps – 1-1/4" - 2"

In cold weather conditions PEX tube becomes stiffer, increasing the force required to make a crimp. This may occur if installed in cold weather conditions or when the product has set out overnight. Under these conditions, Zurn recommends the frequent gauging of crimped connections to ensure a good crimp has been made.

In the event a finished crimp does not gauge we recommend the connection be re-crimped following the instruction below:

1. Place the tool head jaws in the exact location of the first crimp
2. Re-crimp
3. Gauge
4. Re-crimp again if necessary

Testing has shown that it should take no more than two re-crimps to make a good crimp at temperatures as low as 5°F. We do not recommend attempting to make installations at temperatures below 5°F.

System Sizing and Design

The following tables can be used to assist the designer when designing a plumbing system using Zurn PEX.

Equivalent Tubing Length: Along with the pressure loss through the supply tubing, any pressure loss through any other components in the system must be taken into account, such as fittings, shut off valves, etc. Below is a chart that shows the equivalent length of tube in feet per one fitting for Zurn fittings.

Note: Some local codes require that water velocity through tubing cannot exceed 8 ft/s. This cut-off is highlighted on the Pressure Drop for Zurn PEX Tubing. The maximum velocity on this chart is 12 ft/s. This pressure loss in this chart is represented in PSI/foot.

Fitting Equivalent Length (Feet of Tube)							
Zurn PEX XL and Zurn PEX DZR Fitting	Tubing Size						
	3/8"	1/2"	3/4"	1"	1-1/4"	1-1/2"	2"
Coupling	2.7	2.8	3.5	1.0	0.9	0.5	2.6
Elbow	9.2	8.0	9.2	7.8	10.0	12.5	22.1
Tee - Run	3.3	2.4	3.5	2.7	1.0	0.0	3.5
Tee - Branch	9.6	7.1	8.6	5.5	9.0	12.3	19.6

Fitting Equivalent Length (Feet of Tube)			
Zurn PEX CR Fitting	Tubing Size		
	1/2"	3/4"	1"
Coupling	6.4	6.9	4.1
90° Elbow	13.5	15.5	17.4
Tee - Run	5.9	7.0	6.2
Tee - Branch	12.3	14.9	16.1

Pressure Drop for Zurn PEX Tube – psi/foot														
	3/8"		1/2"		3/4"		1"		1-1/4"		1-1/2"		2"	
GPM	Pressure Drop	Velocity (ft/sec)	Pressure Drop	Velocity (ft/sec)	Pressure Drop	Velocity (ft/sec)	Pressure Drop	Velocity (ft/sec)	Pressure Drop	Velocity (ft/sec)	Pressure Drop	Velocity (ft/sec)	Pressure Drop	Velocity (ft/sec)
0.5	0.020	1.7	0.004	0.9	0.001	0.5	0.000	0.3	0.000	0.2	0.000	0.1	0.000	0.1
1	0.070	3.3	0.016	1.8	0.003	0.9	0.001	0.5	0.000	0.4	0.000	0.3	0.000	0.2
1.5	0.149	5.0	0.034	2.7	0.006	1.4	0.002	0.8	0.001	0.6	0.000	0.4	0.000	0.2
2	0.254	6.7	0.057	3.6	0.011	1.8	0.003	1.1	0.001	0.7	0.001	0.5	0.000	0.3
2.2	0.303	7.3	0.069	4.0	0.013	2.0	0.004	1.2	0.001	0.8	0.001	0.6	0.000	0.3
2.5	0.384	8.3	0.087	4.5	0.016	2.3	0.005	1.4	0.002	0.9	0.001	0.7	0.000	0.4
3	0.538	10.0	0.122	5.4	0.023	2.7	0.007	1.6	0.003	1.1	0.001	0.8	0.000	0.5
4			0.207	7.2	0.039	3.6	0.011	2.2	0.004	1.5	0.002	1.1	0.001	0.6
5			0.313	9.1	0.058	4.5	0.017	2.7	0.006	1.8	0.003	1.3	0.001	0.8
6			0.439	10.9	0.082	5.4	0.024	3.3	0.009	2.2	0.004	1.6	0.001	0.9
7			0.583	12.7	0.109	6.4	0.032	3.8	0.012	2.6	0.005	1.8	0.001	1.1
8					0.139	7.3	0.041	4.4	0.015	2.9	0.007	2.1	0.002	1.2
9					0.173	8.2	0.051	4.9	0.019	3.3	0.009	2.4	0.002	1.4
10					0.210	9.1	0.062	5.5	0.023	3.7	0.010	2.6	0.003	1.5
11					0.251	10.0	0.074	6.0	0.028	4.0	0.012	2.9	0.003	1.7
12					0.294	10.9	0.087	6.6	0.033	4.4	0.015	3.2	0.004	1.8
13					0.341	11.8	0.101	7.1	0.038	4.8	0.017	3.4	0.005	2.0
14							0.116	7.7	0.044	5.1	0.020	3.7	0.005	2.2
15							0.132	8.2	0.049	5.5	0.022	4.0	0.006	2.3
16							0.148	8.8	0.056	5.9	0.025	4.2	0.007	2.5
17							0.166	9.3	0.062	6.3	0.028	4.5	0.007	2.6
18							0.184	9.9	0.069	6.6	0.031	4.8	0.008	2.8
19							0.204	10.4	0.077	7.0	0.034	5.0	0.009	2.9
20							0.224	11.0	0.084	7.4	0.038	5.3	0.010	3.1
21							0.245	11.5	0.092	7.7	0.041	5.5	0.011	3.2
22							0.267	12.1	0.100	8.1	0.045	5.8	0.012	3.4
23									0.109	8.5	0.049	6.1	0.013	3.5
24									0.118	8.8	0.053	6.3	0.014	3.7

System Sizing and Design, continued

Pressure Drop for Zurn PEX Tube – psi/foot														
	3/8"		1/2"		3/4"		1"		1-1/4"		1-1/2"		2"	
GPM	Pressure Drop	Velocity (ft/sec)	Pressure Drop	Velocity (ft/sec)	Pressure Drop	Velocity (ft/sec)	Pressure Drop	Velocity (ft/sec)	Pressure Drop	Velocity (ft/sec)	Pressure Drop	Velocity (ft/sec)	Pressure Drop	Velocity (ft/sec)
25									0.127	9.2	0.057	6.6	0.015	3.8
26									0.137	9.6	0.061	6.9	0.016	4.0
27									0.147	9.9	0.066	7.1	0.018	4.2
28									0.157	10.3	0.070	7.4	0.019	4.3
29									0.167	10.7	0.075	7.7	0.020	4.5
30									0.178	11.0	0.080	7.9	0.021	4.6
31									0.189	11.4	0.085	8.2	0.023	4.8
32									0.201	11.8	0.090	8.4	0.024	4.9
33											0.095	8.7	0.026	5.1
34											0.101	9.0	0.027	5.2
35											0.106	9.2	0.028	5.4
36											0.112	9.5	0.030	5.5
37											0.118	9.8	0.032	5.7
38											0.124	10.0	0.033	5.9
39											0.130	10.3	0.035	6.0
40											0.136	10.6	0.036	6.2
41											0.142	10.8	0.038	6.3
42											0.149	11.1	0.040	6.5
43											0.155	11.4	0.042	6.6
44											0.162	11.6	0.044	6.8
45											0.169	11.9	0.045	6.9
46											0.176	12.1	0.047	7.1
47													0.049	7.2
48													0.051	7.4
49													0.053	7.5
50													0.055	7.7
51													0.057	7.9
52													0.059	8.0
53													0.061	8.2
54													0.064	8.3
55													0.066	8.5
56													0.068	8.6
57													0.070	8.8
58													0.073	8.9
59													0.075	9.1
60													0.077	9.2
61													0.080	9.4
62													0.082	9.5
63													0.085	9.7
64													0.087	9.9
65													0.090	10.0
66													0.092	10.2
67													0.095	10.3
68													0.097	10.5
69													0.100	10.6
70													0.103	10.8
71													0.105	10.9
72													0.108	11.1
73													0.111	11.2
74													0.114	11.4
75													0.117	11.5
76													0.120	11.7
77													0.123	11.9
78													0.125	12.0

Connecting Zurn PEX to Fixtures

There are a number of options for the installer to choose from when connecting Zurn PEX to the endpoint fixture. These options depend on local code requirements and fixture types. The following are some of the options available through Zurn. All of the fittings shown below can be found in the Zurn PEX Plumbing and Radiant Heating Product Catalog (unless otherwise noted). Keep in mind that there are a variety of options one can use to connect Zurn PEX tubing to fixtures, and the below are just examples of what can be used.

Note: The QickClamp™ is depicted in the following illustrations under the part number QCLP_X. They are part of a one tool system for sizes up to and including 1". More information can be found in the Zurn PEX Product Catalog and Zurn PEX Plumbing Installation Guide.

Example 2: Water Closet Connection

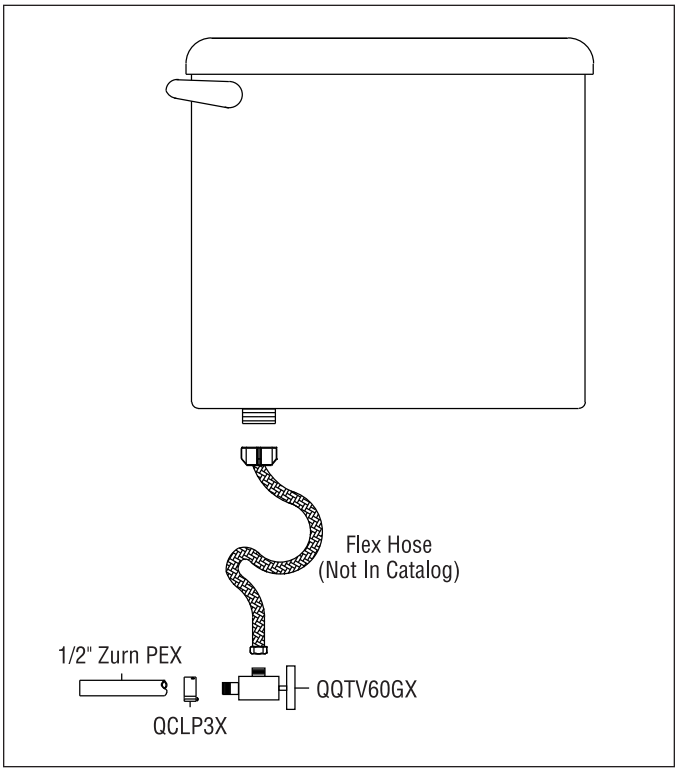

1/2" Stubout Elbow with Flange Connection Example

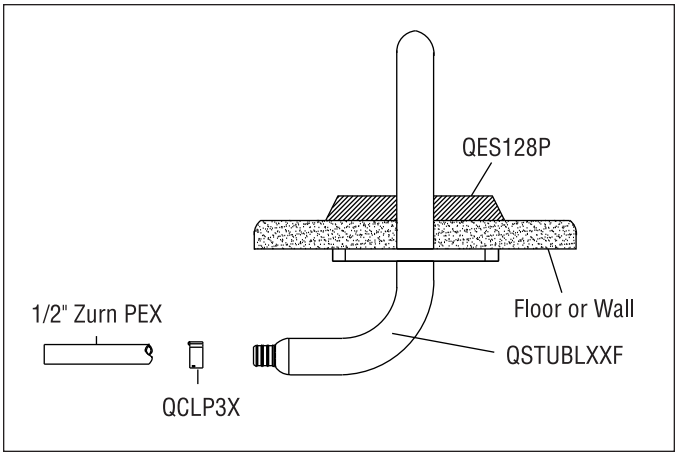

1/2" Stubout Elbow Connection Example

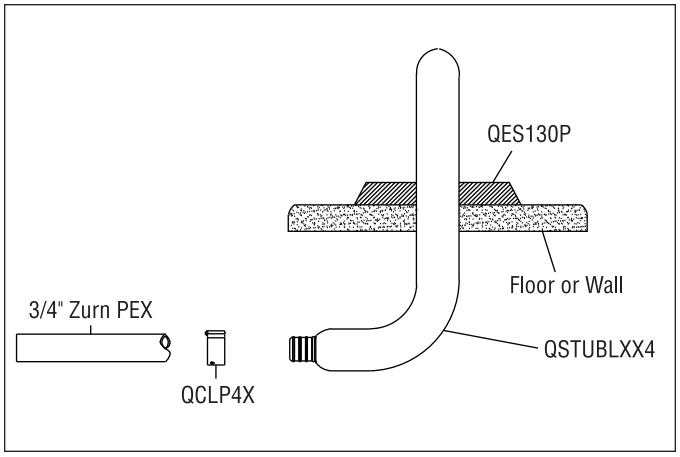

Shower/Bath Connection Example

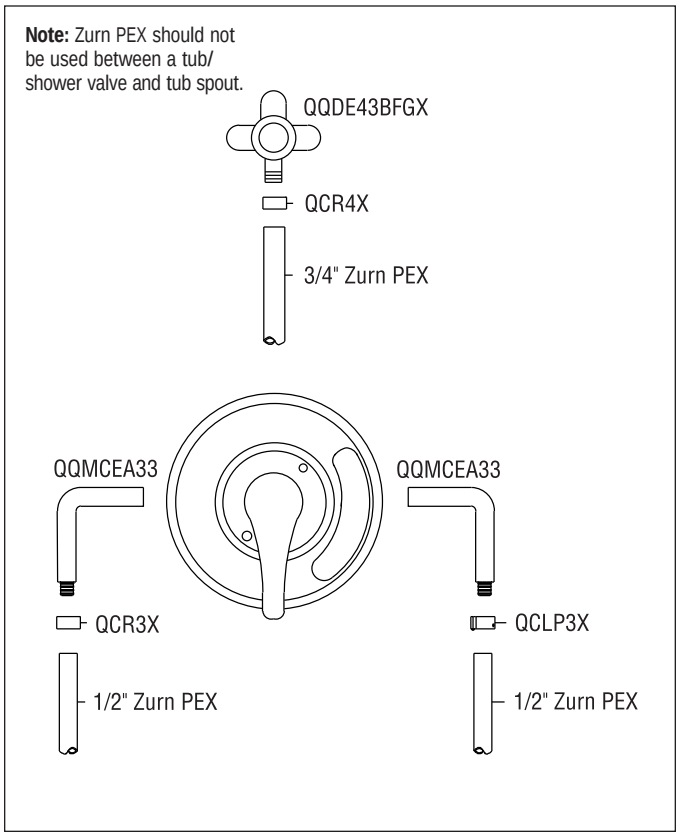

Zurn EcoVantage® Pint Urinal System

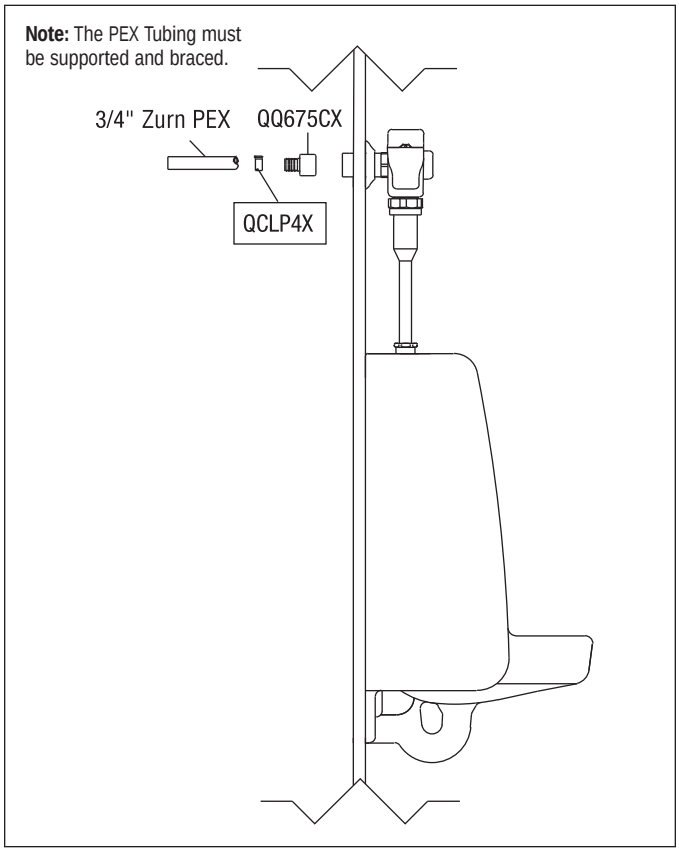

Urinal Flush Operating at 0.5 gpf or Less – Water Closet Connection Example 2

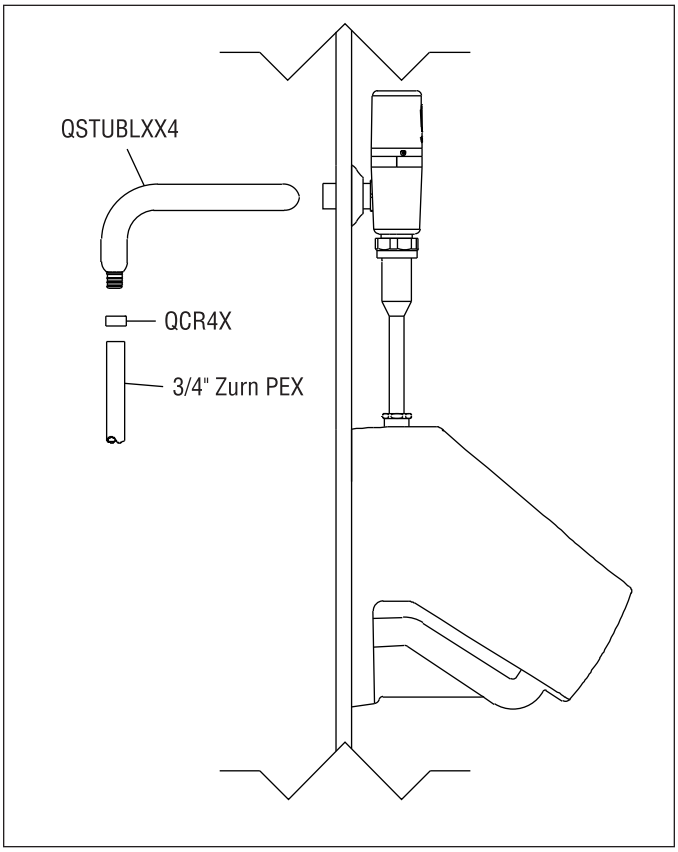

Urinal Flush Valve Operating at 1.0 gpf or Less

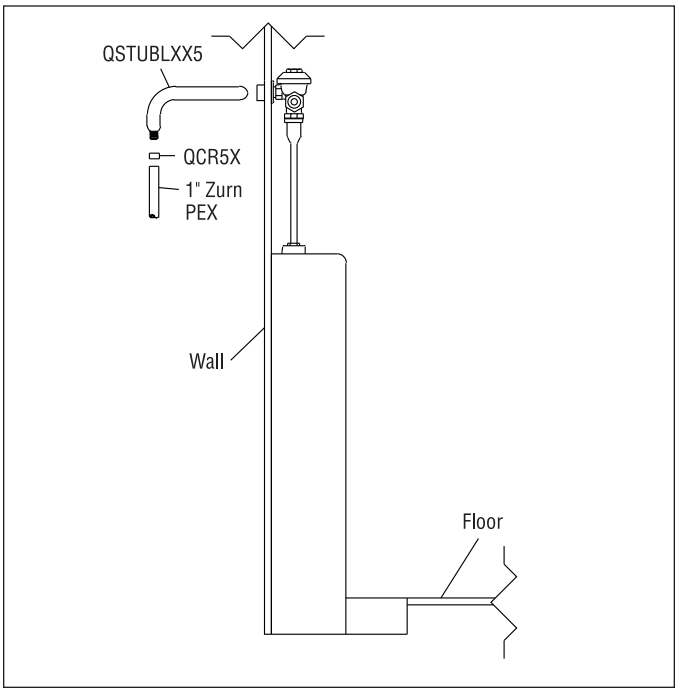

Concealed Water Closet Flush Valve Operating at 1.6 gpf or Less

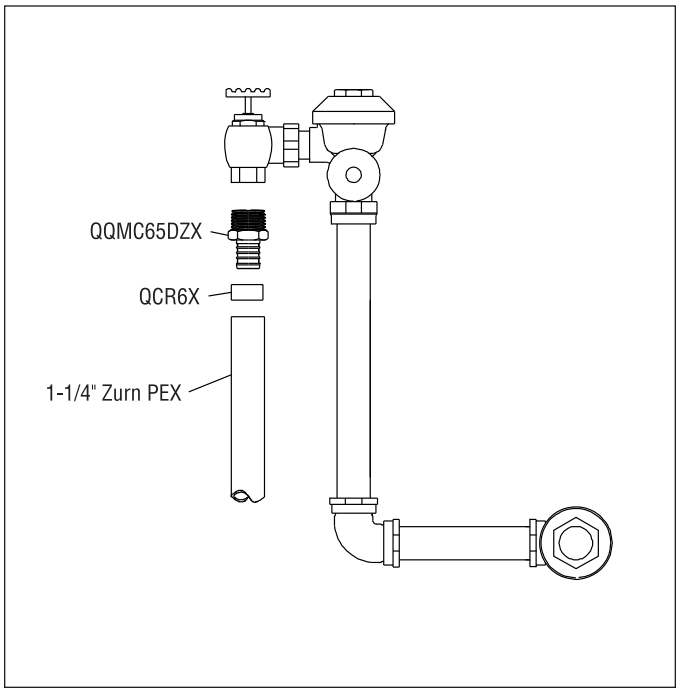

For additional information on Flush Valves, please visit www.zurn.com.

Installation Techniques With Zurn PEX Tubing In Commercial Applications

Zurn PEX is new to most commercial contractors, inspectors, and other trades. It is important that all who might be impacted by the selection of Zurn PEX as a plumbing or heating piping material be familiarized with it. Prior to installation of Zurn PEX tube, we recommend that the local plumbing and building officials be informed about the use of Zurn PEX on the job and any specific details that may be questioned. Because of its corrosion resistance and flexibility, PEX piping may be installed in a different fashion than is usual for the traditional rigid piping material. For example, if the PEX tube is going to be embedded in the concrete floor/ceiling slab between two layers of rebar, it is important to coordinate with the rebar installer so that time is allowed for the PEX installation and that the rebar installer knows to take care and not damage the PEX tube when installing the second layer of rebar.

PEX can be used in all types of building construction such as structural column, shear wall, and wood frame. PEX may also be used in different types of plumbing systems such as main and branch systems, central manifold or homerun systems, and remote manifold systems. The plumbing system chosen will depend on the intended use of the building and other considerations such as lowest installed cost, most efficient water use, etc.

Commercial Building Considerations

Plumbing System Design

The choice of the type of plumbing system to be used in a building is usually the responsibility of the Architect, Engineer or Mechanical Contractor. The decision will be influenced by the intended use of the building, type of construction, and other factors such as lowest installed cost, most efficient use of water, lowest energy losses, etc. The most common types of PEX plumbing systems are:

A. Main and Branch B. Central Manifold C. Remote Manifold

Main and Branch plumbing is the typical plumbing of rigid piping materials. PEX is effective in this type of plumbing as well and its flexibility will allow the elimination of some elbows and its availability in long coils may eliminate the need for some couplings.

A Central Manifold System (sometimes called a Homerun System) is really only practical with a flexible piping system. With this system, a hot and a cold manifold are usually located in some central location (usually near the hot water source) and smaller individual lines are run to each fixture in the building. These smaller lines are usually installed without any fittings except for the connection to the manifold and the connection to the fixture. Properly designed, these systems save water by minimizing the amount of water that is dumped down the drain while waiting on hot water to arrive at the fixture and they save energy compared to continuously circulating hot water types of systems.

A Remote Manifold System is a variation on a Main and Branch system. A small manifold is installed near a location of several fixtures and small lines are run from the manifold to each fixture. The manifold is supplied by a larger line that is sized the meet the fixture unit demand. Since these remote manifolds are usually not close to the hot water source, this design does not provide the same water savings or energy savings as a Central Manifold. The use of remote manifolds does frequently simplify the installation compared to typical Main and Branch type of systems.

Commercial Construction Techniques

Regardless of the actual type of building being constructed (structural column, shear wall, etc.) there are common issues with respect to installation of Zurn PEX piping.

Concrete Slabs and Floor/Ceilings

Most commercial buildings start out with a concrete slab on grade and many multi-story buildings have concrete floor/ceilings in them for the levels above ground. Zurn PEX tube will frequently have to pass through these concrete slabs or be embedded within them.

Pass Through

When Zurn PEX tube is in place before the concrete slab is poured, it must always be sleeved where it passes through a concrete slab to protect it from abrasion. This sleeving may be the polyethylene film sleeving commonly used on copper tubing or it may be a more substantial material to provide additional protection from damage during finishing of the concrete slab. It is also important that the Zurn PEX tube be securely located so that it does not shift from its desired location while the slab is being poured. The concrete finisher should be cautioned to not damage the tube with any power finishing equipment.

If the tube is installed through a cored or drilled hole in the slab after it is poured, no sleeving is necessary if there is ample clearance and the tube is not being forced against an edge of the opening. Frequently, these openings must be sealed either for fire stopping, smoke transmission, or pests. These sealing materials must be suitable for contact with Zurn PEX tube.

Embedded in Slab

There are several things to do when the Zurn PEX tube is going to be embedded within a concrete slab. Before the job begins, a decision has to be made about having the Zurn PEX tube installed inside a flexible corrugated conduit in slab or not. The advantages of using the flexible conduit are additional protection to the tube during the construction process and the ability to replace the tube if it has been damaged. The installing contractor may want to pre-sleeve the required lengths of tube before it reaches the job site. It is possible to embed Zurn PEX tube directly in the concrete without concern for corrosion. Millions of feet have been installed this way in radiant floor applications. If this option is chosen, care must be taken to make sure the tube is not damaged during or after installation because replacement is not practical once the slab is poured.

The actual routing of the tube should be marked on the floor deck to be sure there is no misunderstanding. Care should be given to assure that the tube is in locations that give plenty of clearance to any planned openings in the slab and any locations where the slab will be drilled for anchors later in construction or finish out of the building.

Next, the rebar is typically installed and then the Zurn PEX tube is laid out and attached to the rebar following the routing marked on the floor deck. The tube, or the tube inside the conduit, should be fastened to the rebar every 32". This can be done using wire fasteners. Fasteners and tools are available from Zurn PEX. Care should be taken to assure that the tube is not pinched or deformed by these wire fasteners. When laying out the Zurn PEX tube, be sure to leave ample length at each end to connect to the intended manifold, fixture or fitting at a later time. Once the tube has been installed, the second layer of rebar, if it is required, can be installed. The rebar installers must be trained not to walk on or otherwise damage the installed Zurn PEX tube.

DO NOT EMBED ANY FITTINGS IN THE CONCRETE SLAB! All fittings and connections must be made outside of the slab.

Zurn PEX tube must be sleeved or protected from abrasion where it enters and leaves a slab. Since the tube usually is bent to enter or leave the slab, conduit elbows such as the QHCE_ in the Zurn PEX catalog are frequently used for this purpose. The elbows also provide protection during the finishing of the slab after the pour.

Other acceptable sleeves are the polyethylene film sleeving or corrugated conduit. These sleeves should extend at least 6" into the slab and 6" above the finished level of the slab. Once the slab has been poured and cured, the excess sleeving may be trimmed, being very careful not to damage the Zurn PEX tube inside.

Prior to the pouring of the slab, the installed Zurn PEX tubing must be pressure tested. Refer to Pressure Testing earlier in this guide. The system must be pressurized during the pour. This will provide notification if the tube is damaged during the pour.

Piping in Framing

The two common framing materials used in commercial construction are metal and wood. Metal is usually required for non-combustible construction. Wood is frequently used in combustible construction and may be used in some fire-rated construction. Some piping will almost always have to be run through the framing of a building.

Metal Framing

When Zurn PEX tube is run through metal framing members, care must be taken to prevent damaging the tube by contact with sharp edges of the metal framing material. Plastic bushing sized for the tube being installed should be used in the holes in the metal framing. If bushings cannot be used, the tubing must be protected with a heavy plastic sleeve or insulation that is resistant to cutting. Always be sure to comply with the building code with respect to the size and number of holes or notches being cut into framing members.

Wood Framing

When Zurn PEX tube is run through wood framing members, the holes in the wood should be at least 1/8" larger in diameter than the Zurn PEX tube. This will give ample clearance to allow the tube to expand and contract with changes in temperature. The edges of the wood are not abrasive to the Zurn PEX tube. Always be sure to comply with the building code with respect to the size and number of holes or notches being cut into framing members.

If Zurn PEX tube is being run through prefabricated or engineered wood trusses, care should be taken to make sure that the tube does not come in contact with any of the metal gussets that might have been used in the construction of these trusses.

Regardless of the framing material, if the tubing is installed within 2" of a nailing surface, a steel protective plate should be installed on the framing member to protect the tube from damage when drywall is installed or nailing by the building occupant.

Vertical Piping Between Floors

In multi-story commercial buildings, it will usually be necessary to run main lines vertically. These mains may be installed in vertical chases or they may pass through the concrete floors in pre-formed or cut holes. There is almost always a cold water main or riser and frequently there will be a hot water main or riser as well. With these mains or risers, it is important to support the weight of the tube and control the expansion and contraction so that excessive stresses or deflections are not applied to any branch lines off the risers.

Vertical Zurn PEX piping must be supported at the floor on every floor of the building and at the ceiling of every other floor (see illustration) using epoxy coated pipe clamps. These pipe clamps should not distort the Zurn PEX tube and they should not have sharp edges that would cut the tube. There should also be a mid-story guide (see illustration). These supports and mid-story guide are required even if the piping is in a vertical chase. Installing the main riser tube in this manner limits the length of tube for which expansion and contraction have to be considered and controls the amount of vertical displacement that any branch lines off the riser will experience.

Installation Techniques with Zurn PEX Tubing in Commercial Applications

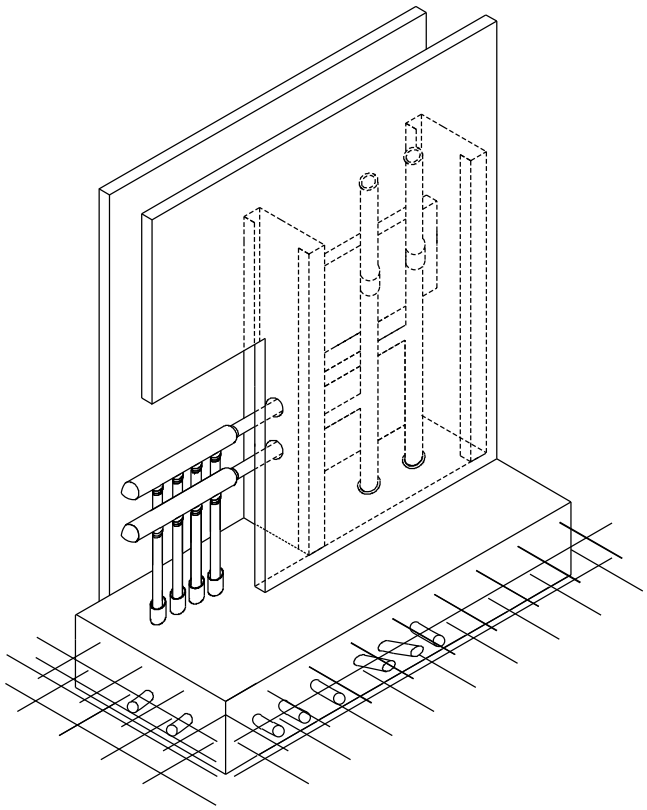

Example of Copper Manifold (QCM43-_GX) in Commercial Construction

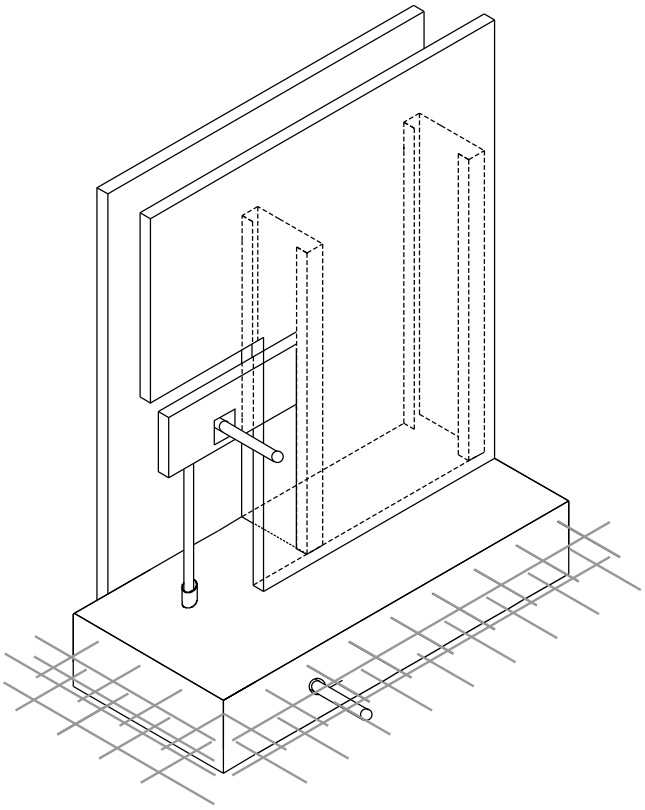

Example of Fixture Supply in Commercial Construction

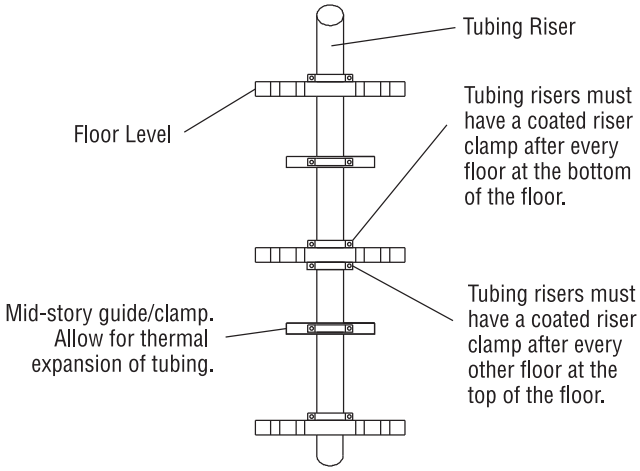

Vertical Piping Between Floors

Fire-Rated Wall Penetrations With Zurn PEX Tube

Fire-rated wall penetration with Zurn PEX tube must be done in a way that doesn't compromise the integrity of the fire-rated wall. The type of sealant or seal used depends on the rating of the wall. The most common fire-rated wall assemblies are:

1. One-hour wood-frame floor/ceiling assemblies
2. One- and two-hour concrete floor/ceiling unrestrained (and restrained) assemblies
3. One-hour wood-stud/gypsum wallboard wall assemblies
4. One-hour steel-stud/gypsum wallboard wall assemblies

Note: The information presented in this section is intended to show examples of how to penetrate through different fire resistant construction assemblies. It should not be used to actually construct fire resistant assemblies.

Firestop Manufacturers

There are numerous firestop manufacturers who have tested their products with PEX tubing. These tests establish the installation procedures for installing the firestop/sealant around the PEX tubing at the penetration. The firestop/sealant manufacturer's recommended installation procedures must be followed in order to maintain the integrity of the fire-rated wall.

Below is a list of companies (in no particular order) who Zurn is aware of that manufacture firestop/sealants. The firestop/sealant manufacturer must be contacted to determine the proper product for a given application.

If Zurn PEX tubing is penetrating through a fire resistant construction and requires firestop assemblies, then the installer must consider the following:

- The firestop system being used must be compatible for Zurn PEX tubing.
- That the firestop system is suitable for the assembly.
- That the firestop system complies with all local and regional codes.
- Using a smaller penetration through the floor for the firestop will result in a cost savings. This is typically done when utilizing PEX.

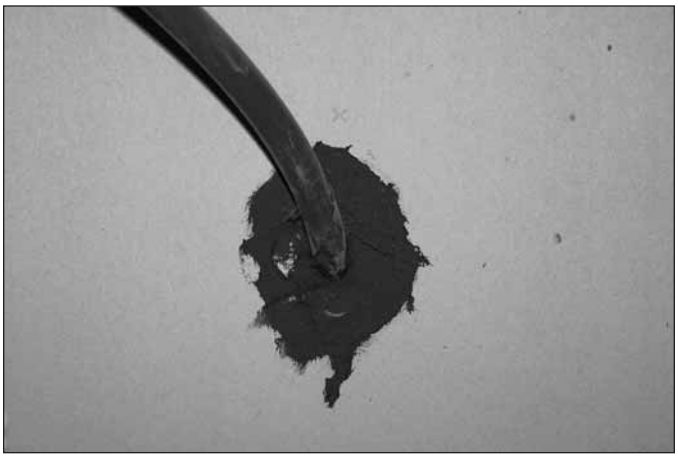

Company	Website	Products
AD Fire Protection Systems	www.adfire.com	Various
3M	www.3m.com/firestop	Various
Passive Fire Protection Partners	www.firestop.com	WS-1 Wrap Strip
Hilti	www.us.hilti.com	FS One Sealant
Rectorseal	www.rectorseal.com	Metacaulk pipe collar, Metacaulk 1000
Nelson Firestop Products	www.nelsonfirestop.com	LBS3 Sealant
Hercules Chemical Company	www.herchem.com	Plumbers Firestop Sealant
Presealed Systems	presealedsystems.com	PS-CP

Firestop Penetrations

Below are several diagrams that illustrate basic firestop penetrations with PEX tubing. These diagrams are intended as examples only and will vary depending upon the firestop manufacturer. For detailed information concerning penetration of firestops in different applications, contact the firestop manufacturer. Their instructions must be followed.

Wrap Strip Thru Wall

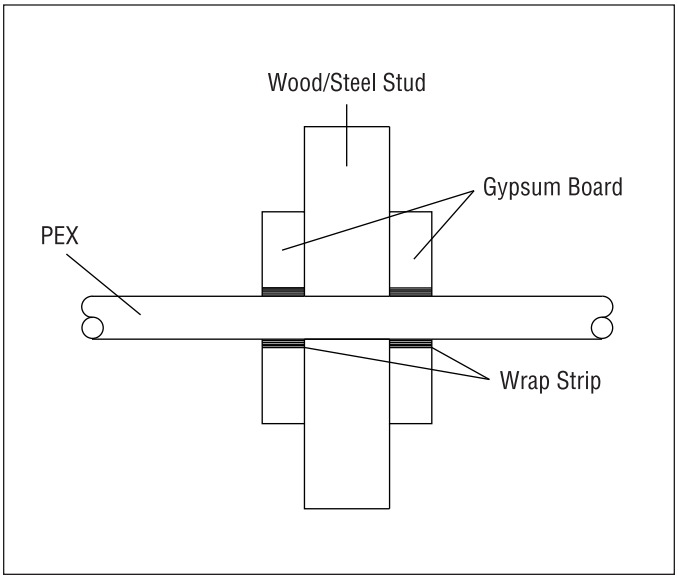

Fire Resistant Caulking Thru Wall

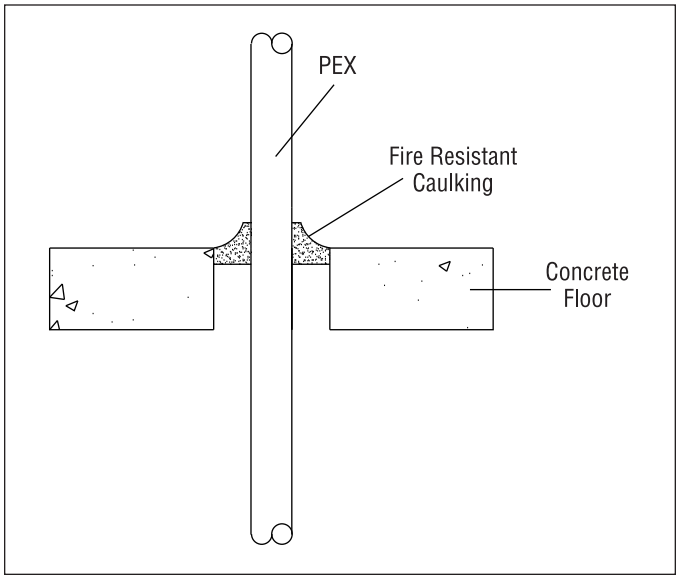

Fire Resistant Caulking Thru Floor

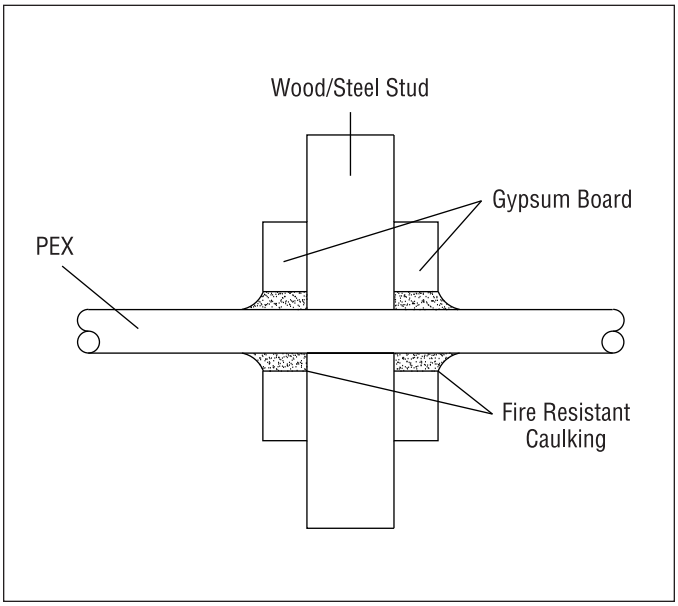

PEX Bundle Thru Floor

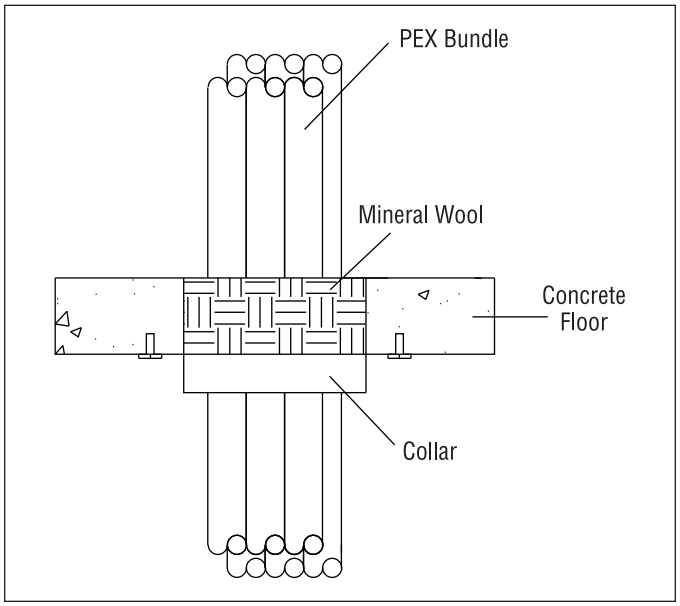

Introduction

At Zurn PEX we understand that designing and plumbing with Zurn PEX tubing may be a new experience for you. Within this design guide we intend to present examples of how the benefits and advantages of Zurn PEX provide additional design options. All options are assuming a central hot water source, rather than a water heater. Additionally, the various stubouts, hanging, and supporting methods with Zurn PEX will be shown.

Please note that pipe sizes indicated are for the purposes of the example. The proper tube size is best left up to the discretion of the specifying design engineer and their knowledge of design requirements. The layouts used are not engineered for actual use but are intended to provide examples for specifying design engineers.

As always, please check with local codes to be sure PEX is approved in your area.

PEX Plumbing System Options

Traditional Trunk and Branch Method Using Zurn PEX

Features and Benefits

- Simple design conversion from rigid piping to flexible Zurn PEX systems
- Opportunity to reduce or eliminate fittings such as couplings because of Zurn PEX long coil availability
- Opportunity to reduce or eliminate fittings such as elbows because of Zurn PEX flexibility
- Deliver hot water quicker during simultaneous fixture operation
- Generally supply one fixture at a higher pressure
- Minimal tubing required

Central Manifold (Homerun) Method Using Zurn PEX

Features and Benefits

- Easier piping runs to each fixture using smaller diameter tubing such as 1/2" and 3/8"
- Faster installation time
- Opportunity to eliminate all fittings between manifold and fixture
- Opportunity to have centrally located individual shut-offs at the manifold
- Quicker delivery of hot and cold water to fixture
- More stable pressure to each fixture when operating fixtures simultaneously
- No concealed joints
- Minimal required fittings
- Saves water

Remote Manifold Method Using Zurn PEX

Features and Benefits

- Relatively simple system design conversion from rigid systems to Zurn PEX systems
- Opportunity to reduce the number of fittings installed
- Quicker hot water delivery during sequential operation
- Opportunity to have centrally located valves to shut off manifold

Typical Large Apartment Layouts

Traditional Trunk and Branch Method

Notes:

- Valves shall be located behind access panel within apartment closet or at specifier's desired location such as hallway access panel.
- Access panel shall be no larger than necessary for easy operation of valves.
- All fixture drops shall be 3/8" or 1/2" tube size.
- Hot water provided by central hot water source (not shown).

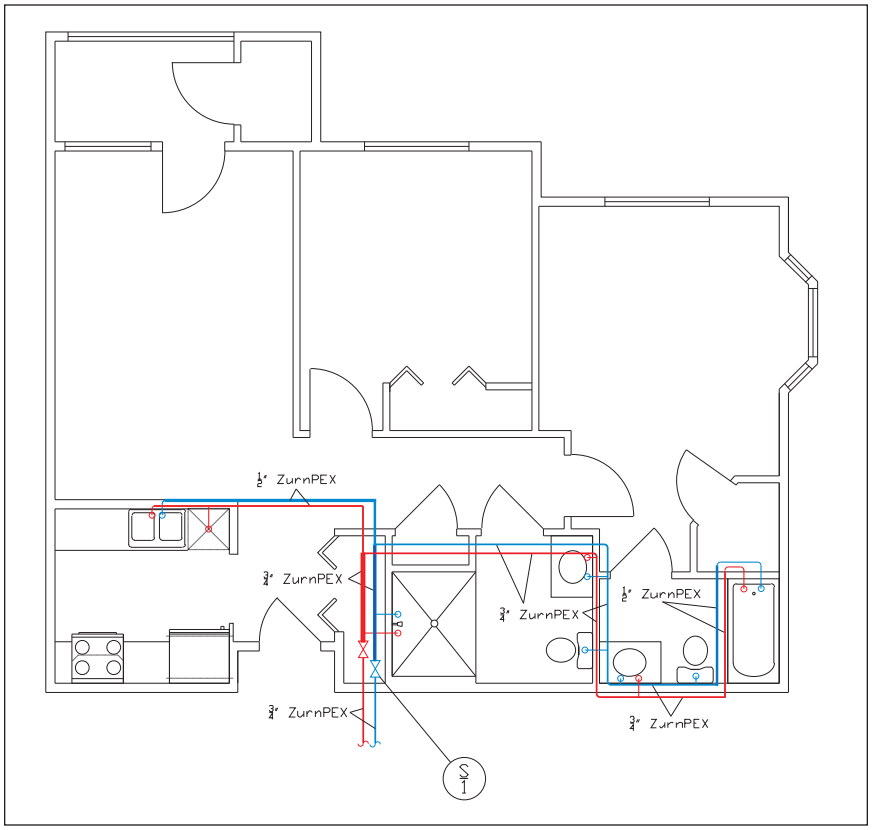

Central Manifold (Homerun) Method

Notes:

- Manifold shall be installed per Zurn PEX installation instructions.
- Manifold shall be located behind access panel within apartment closet or at specifier's desired location such as hallway access panel.
- Manifold access panel shall be no larger than necessary for easy operation of valves.
- All runs from Zurn PEX manifold shall utilize 3/8" or 1/2" tubing.
- All runs shall go directly to end fixture whenever possible.
- Hot water provided by central hot water source (not shown).

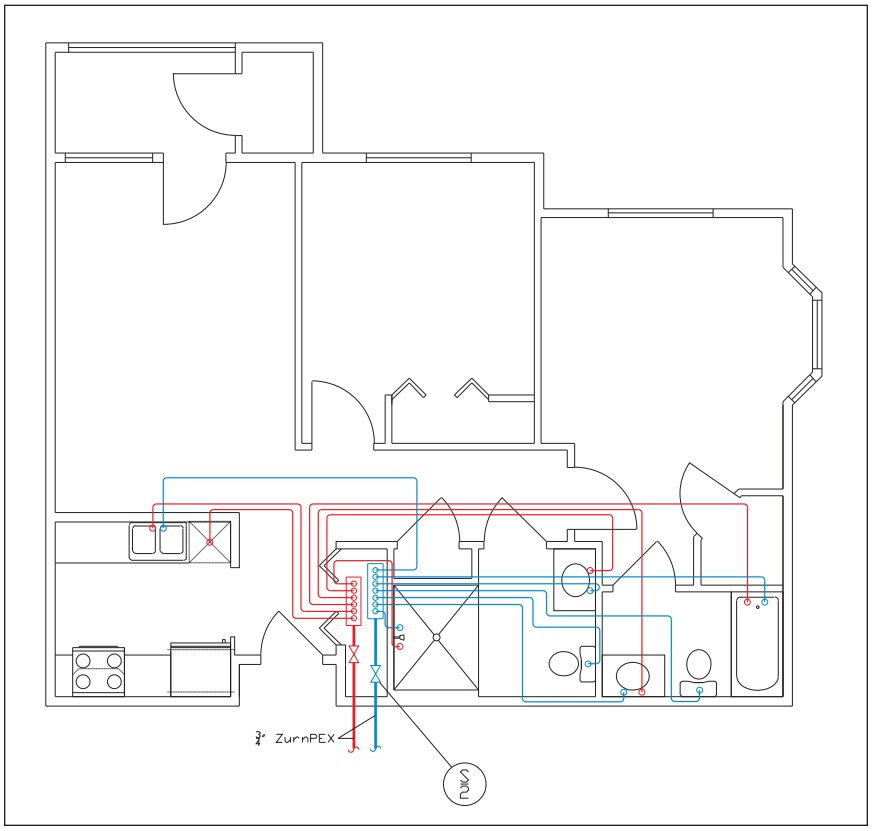

Typical Large Apartment Layout

Remote Manifold Method

Notes:

- Valves shall be located behind access panel within apartment closet or at specifier's desired location such as hallway access panel.
- Access panel shall be no larger than necessary for easy operation of valves.
- All fixture drops shall be 3/8" or 1/2" tube size.
- Hot water provided by central hot water source (not shown).

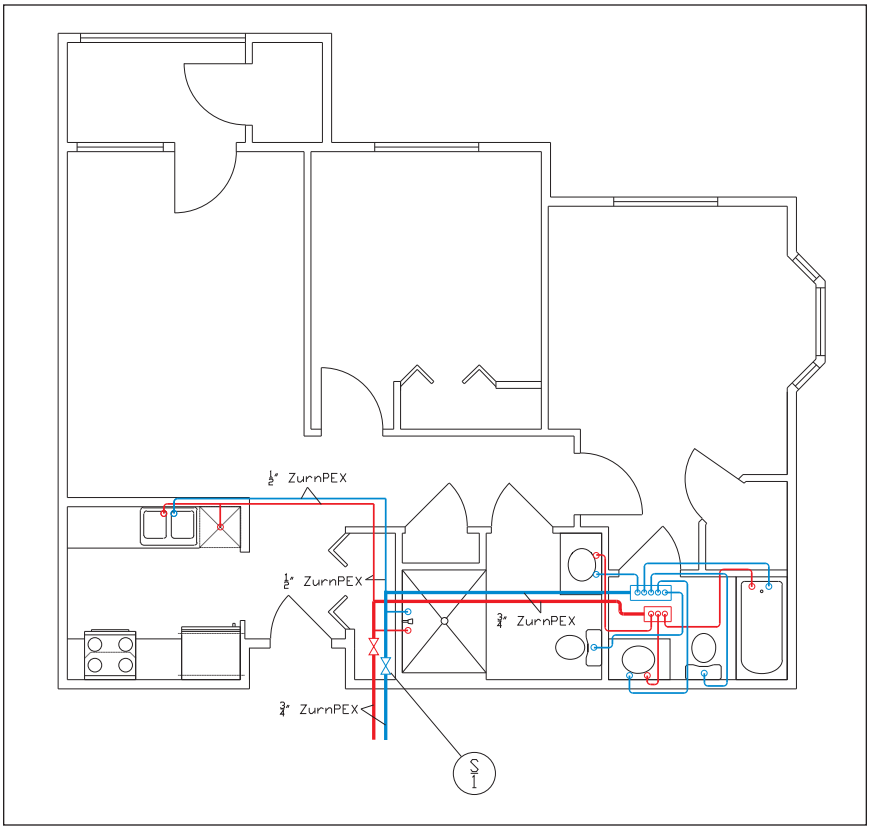

Typical Small Apartment Layout

Traditional Trunk and Branch Method

Notes:

- Valves shall be located behind access panel within apartment closet or at specifier's desired location such as hallway access panel.
- Access panel shall be no larger than necessary for easy operation of valves.
- All fixture drops shall be 3/8" or 1/2" tube size.
- Hot water provided by central hot water source (not shown).

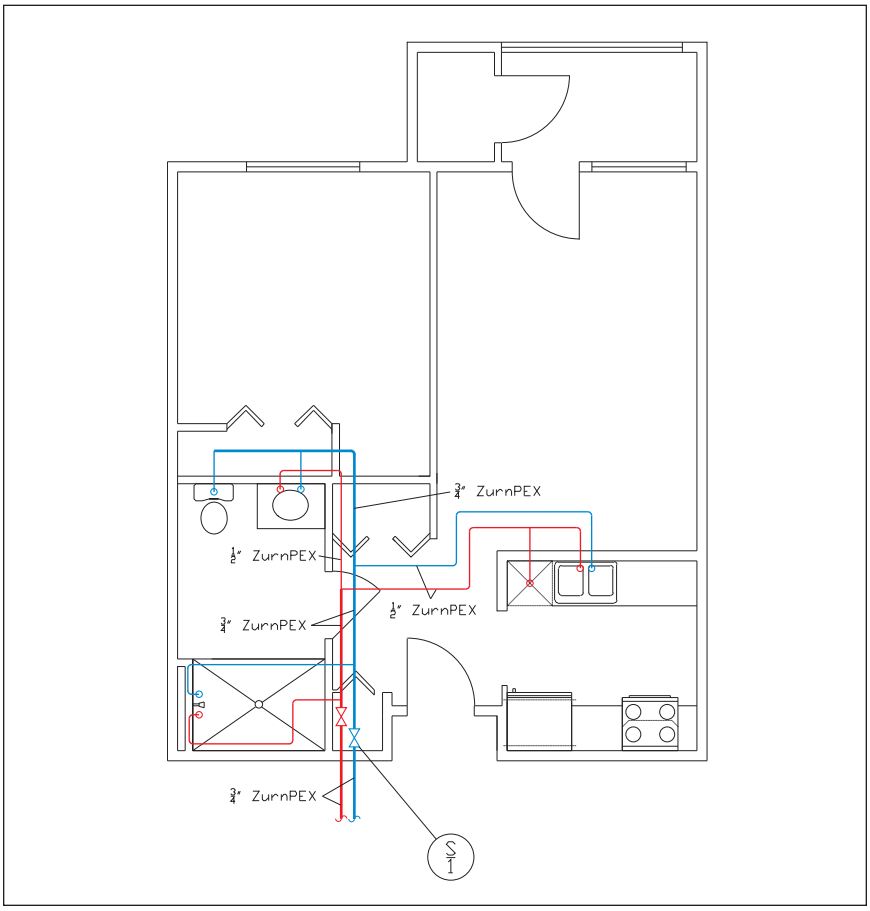

Typical Small Apartment Layouts

Central Manifold (Homerun) Method – Using QickPort® Manifolds

Notes:

- Manifold shall be installed per Zurn PEX installation instructions.
- Manifold shall be located behind access panel within apartment closet or at specifier's desired location such as hallway access panel.
- Manifold access panel shall be no larger than necessary for easy operation of valves.
- All runs from Zurn PEX manifold shall utilize 3/8" or 1/2" tubing.
- All runs shall go directly to end fixture whenever possible.
- Hot water provided by central hot water source (not shown).

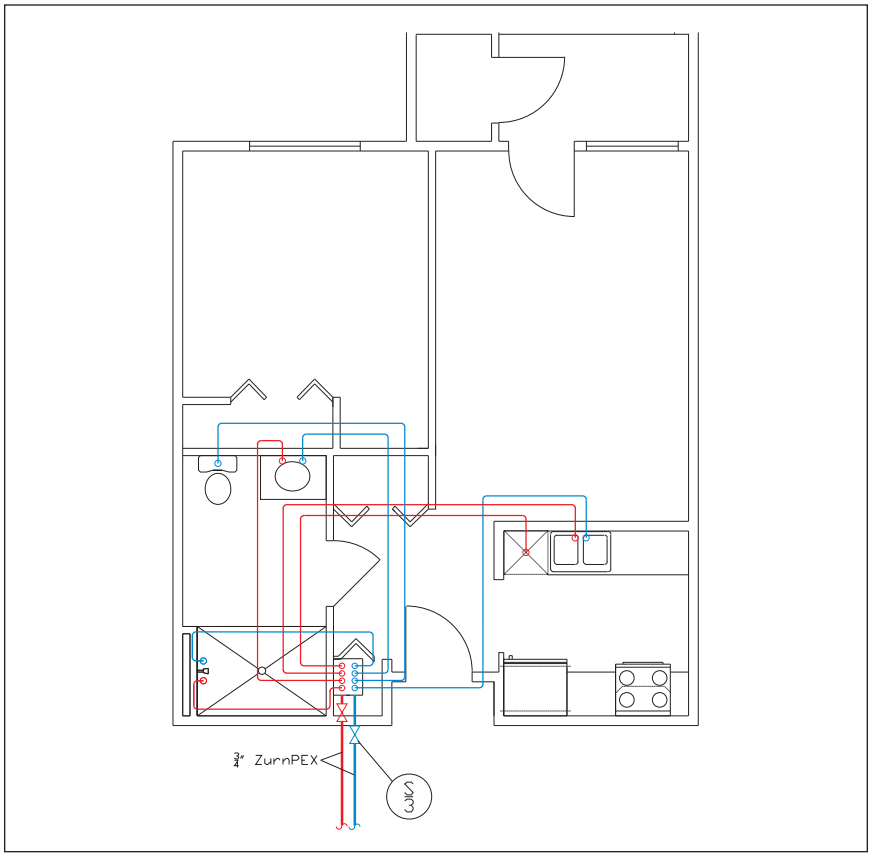

Central Manifold (Homerun) Method – Using CR Manifolds

Notes:

- All runs from Zurn PEX manifolds shall utilize 1/2" tubing.
- All runs shall go directly to end fixture whenever possible.
- Hot water provided by central hot water source (not shown).

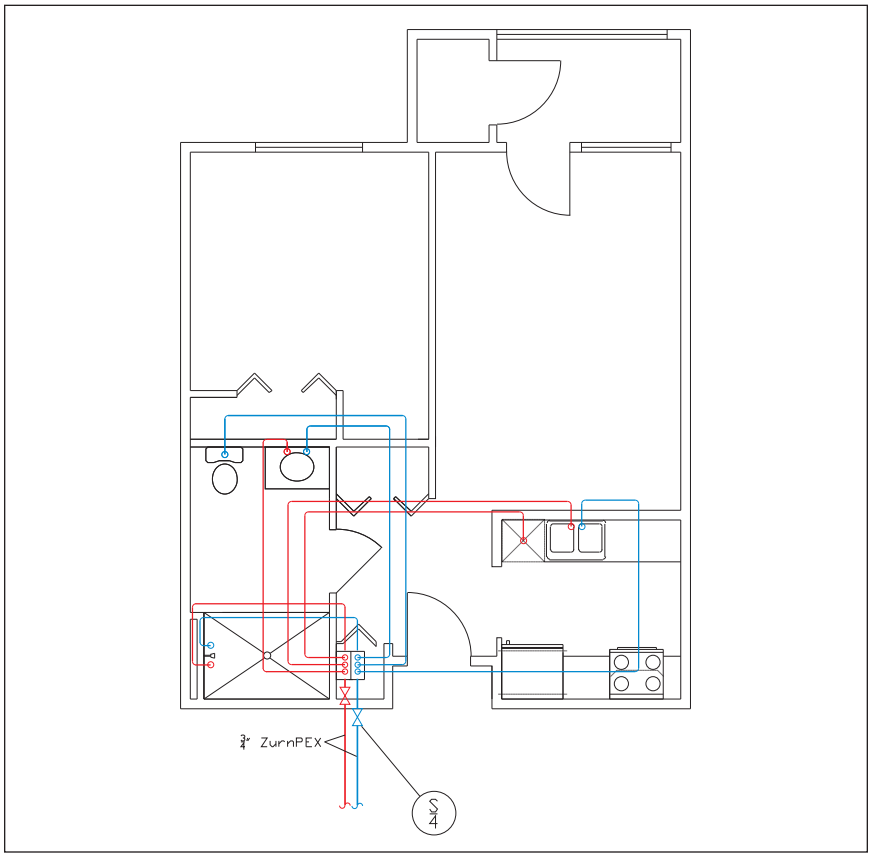

Typical Back-to-Back Hotel Room Layouts

Traditional Trunk and Branch Method

Notes:

- Valves shall be located behind access panel within hotel room closet or at specifier's desired location such as hallway access panel.
- Access panel shall be no larger than necessary for easy operation of valves.
- All fixture drops shall be 3/8" or 1/2" tube size.
- Hot water provided by central hot water source (not shown).

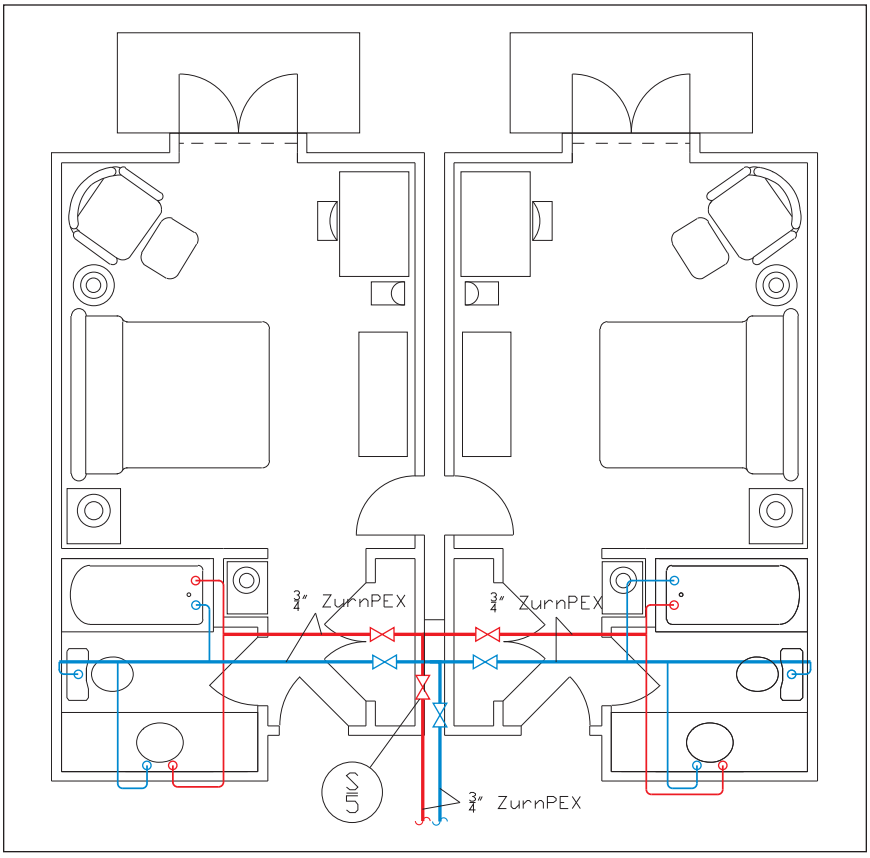

Central Manifold (Homerun) Method

Notes:

- Manifold shall be installed per Zurn PEX installation instructions.
- Manifold shall be located behind access panel within hotel room closet or at specifier's desired location such as hallway or bath.
- Manifold access panel shall be no larger than necessary for easy operation of valves.
- All runs from Zurn PEX manifold shall utilize 3/8" or 1/2" tubing.
- All runs shall go directly to end fixture whenever possible.
- Hot water provided by central hot water source (not shown).

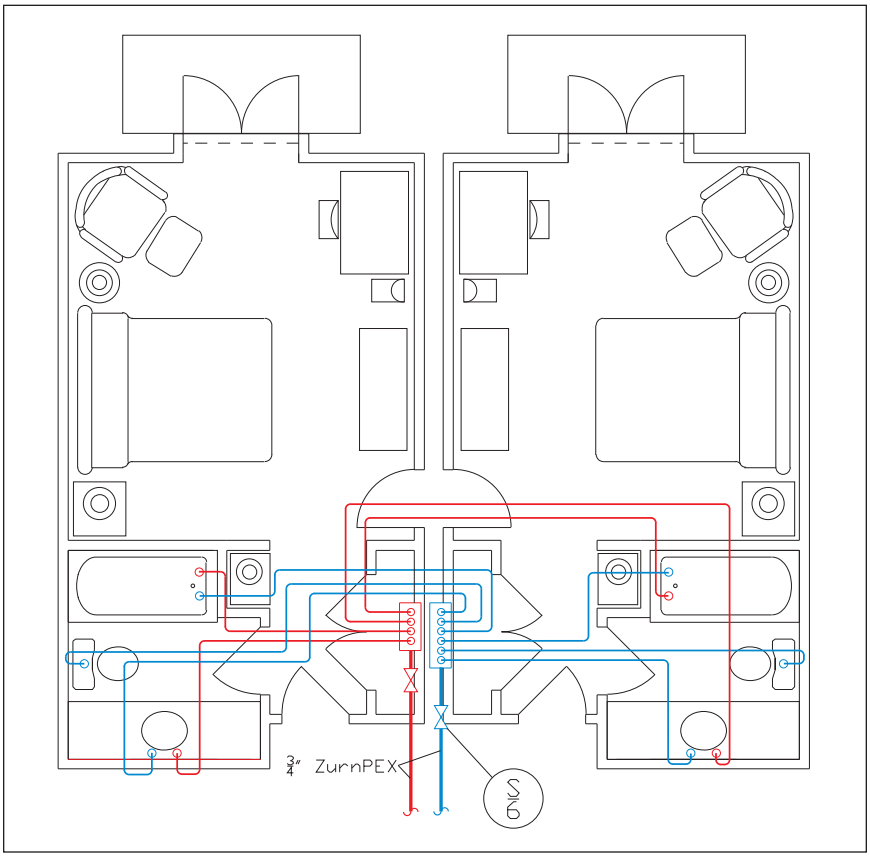

Typical Back-to-Back Hotel Room Layout

Remote Manifold Method

Notes:

- Valves shall be located behind access panel within hotel room closet or at specifier's desired location such as hallway or bath.
- Access panel shall be no larger than necessary for easy operation of valves.
- All fixture drops shall be 1/2" tube size.
- Hot water provided by central hot water source (not shown).

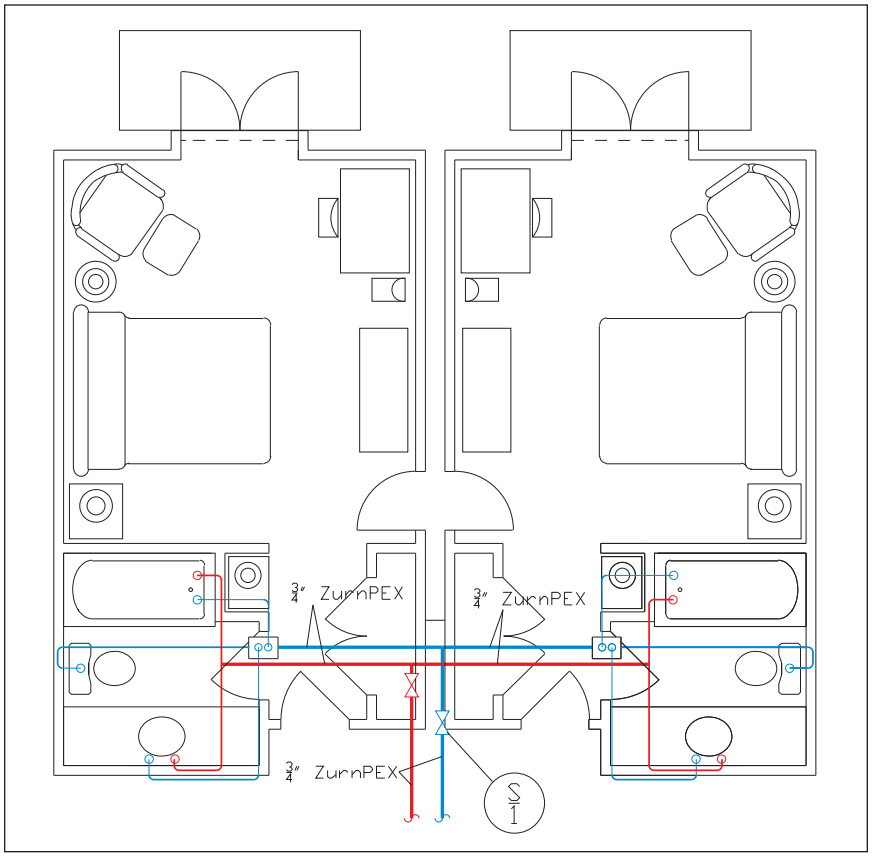

Risers

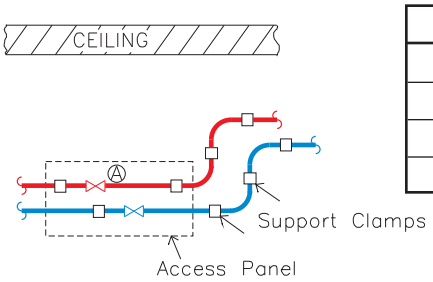

S/1		
A	QQBV44GX	3/4" x 3/4" Quarter-Turn Low-Lead Brass Ball Valves
B	QPM43-5	CR Manifold - 3/4" Inlet x (5) 1/2" Outlets
C	QPM43-3	CR Manifold - 3/4" Inlet x (3) 1/2" Outlets
A*	QQBV55GX	1" x 1" Quarter-Turn Low-Lead Brass Ball Valves

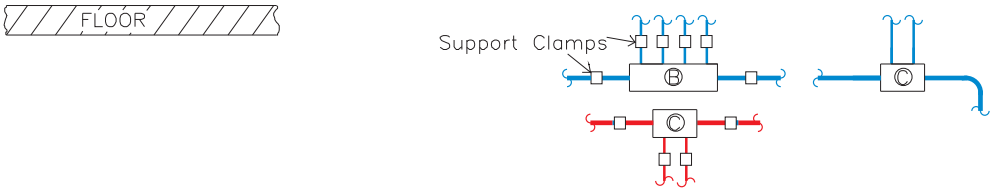

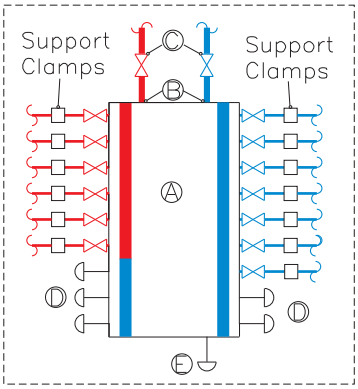

S/2

S/2		
A	QPPM6H12C-3	Preassembled QickPort Manifold - 9 Hot, 12 Cold, with 1/2" CR Valves
B	QQPSFC45X	QickPort Inlet Connection - 1" Swivel x 3/4" Barb (CR)
C	QQBV44GX	3/4" x 3/4" Quarter-Turn Low-Lead Brass Ball Valves
D	QTC3FQP	QickPort 1/2" Outlet Cap
E	QTC5FBG	QickPort 1" Outlet Cap
A*	QPPM6H12C	Preassembled QickPort Manifold - 9 Hot, 12 Cold, No Valves
A**	QQPSFC33X	1/2" CR Swivel Adaptors to Connect to QickPort Manifold Outlets
B*	QQPSFC55X	QickPort Inlet Connection - 1" Swivel x 1" Barb (CR)
C*	QQBV55GX	1" x 1" Quarter-Turn Brass Ball Valves

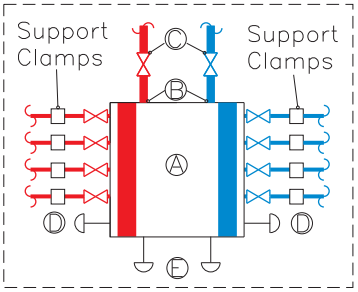

S/3

S/3		
A	QPPM10-3	Preassembled QickPort Manifold - 5 Hot, 5 Cold, with 1/2" CR Valves
B	QQPSFC45X	QickPort Inlet Connection - 1" Swivel x 3/4" Barb (CR)
C	QQBV44GX	3/4" x 3/4" Quarter-Turn Low-Lead Brass Ball Valves
D	QTC3FQP	QickPort 1/2" Outlet Cap
E	QTC5FBG	QickPort 1" Outlet Cap
A*	QPPM10	Preassembled QickPort Manifold - 5 Hot, 5 Cold, No Valves
A**	QQPSFC33X	1/2" CR Swivel Adaptors to Connect to QickPort Manifold Outlets
B*	QQPSFC55X	QickPort Inlet Connection - 1" Swivel x 1" Barb (CR)
C*	QQBV55GX	1" x 1" Quarter-Turn Brass Ball Valves

*Alternate Option

Risers, continued

S/4		
A	QPM43-4	CR Manifold - 3/4" Inlet x (4) 1/2" Outlets
B	QQBV44GX	3/4" x 3/4" Quarter-Turn Low-Lead Brass Ball Valves
A*	QCM43-4G	Copper Manifold - 3/4" Inlet x (4) 1/2" Outlets

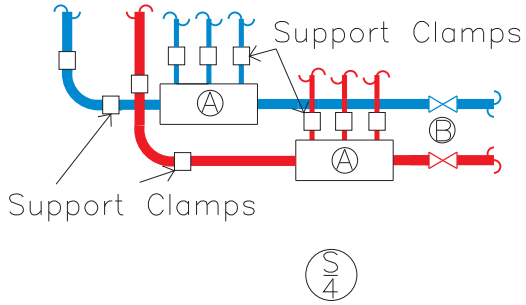

S/5		
A	QQBV44GX	3/4" x 3/4" Quarter-Turn Low-Lead Brass Ball Valves
B	QQPT444X	3/4" x 3/4" x 3/4" CR Tee

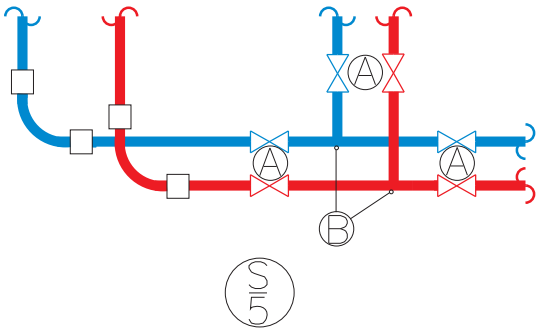

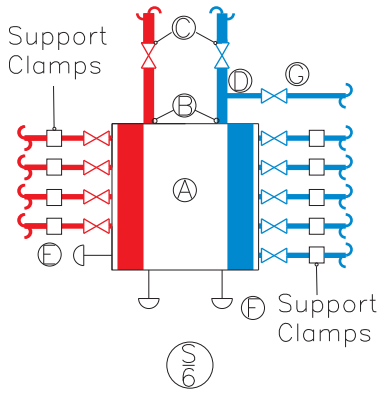

S/6		
A	QPPM10-3	Preassembled QickPort Manifold - 5 Hot, 5 Cold, with 1/2" CR Valves
B	QQPSFC45X	QickPort Inlet Connection - 1" Swivel x 3/4" Barb (CR)
C	QQBV44GX	3/4" x 3/4" Quarter-Turn Low-Lead Brass Ball Valves
D	QQPT444X	3/4" x 3/4" x 3/4" CR Tee
E	QTC3FQP	QickPort 1/2" Outlet Cap
F	QTC5FBG	QickPort 1" Outlet Cap
G	QQBV33GX	1/2" x 1/2" Quarter-Turn Brass Ball Valve
A*	QPPM10	Preassembled QickPort Manifold - 5 Hot, 5 Cold, No Valves
A**	QQPSFC33X	1/2" CR Swivel Adaptors to Connect to QickPort Manifold Outlets
B*	QQPSFC55X	QickPort Inlet Connection - 1" Swivel x 1" Barb (CR)
C*	QQBV55GX	1" x 1" Quarter-Turn Brass Ball Valves

*Alternate Option

Typical Men's and Women's Bathroom Layout

Traditional Trunk and Branch Method

Sink: Zurn EcoVantage® Lavatory Faucet with 0.5 gpm Aerator
Model: Z6920; Qty: 4

Urinal: Zurn EcoVantage® 0.125 gpf The Pint®
Model: Z5798; Qty: 1

WLC-1: Zurn EcoVantage® 1.28 gpf – ADA Compliant
Model: Z5665; Qty: 2

WLC-2: Zurn EcoVantage® 1.28 gpf
Model: Z5655; Qty: 1

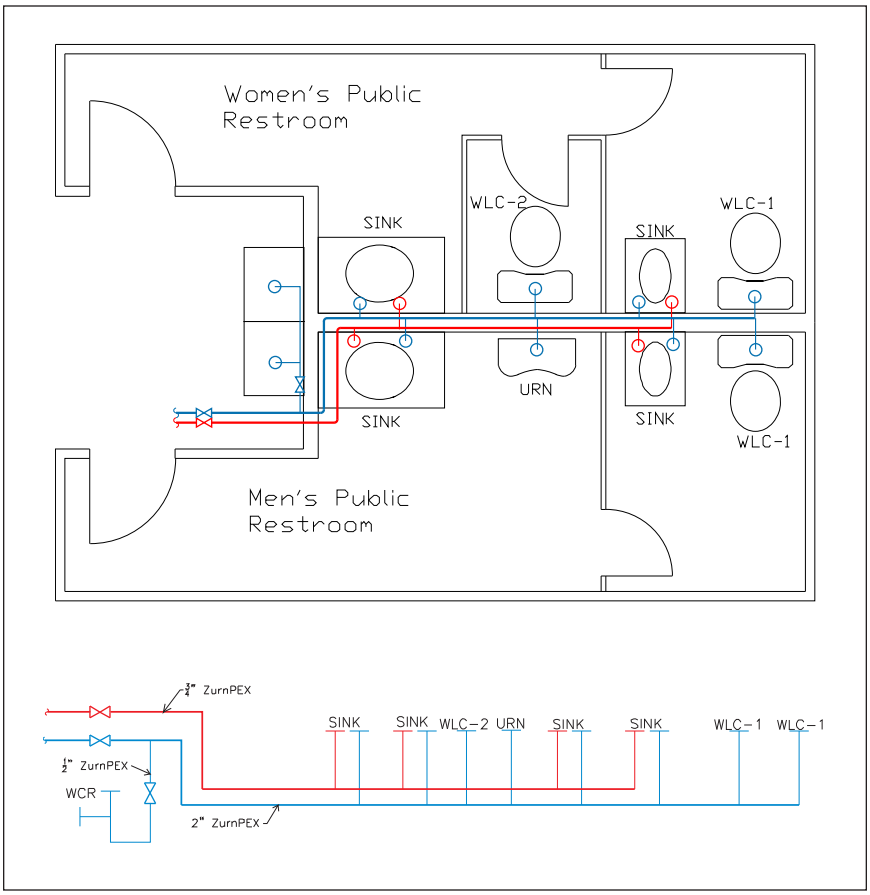

Typical Public Men's and Women's Bathroom Layout

Central Manifold (Homerun) Method

Sink: Zurn EcoVantage® Lavatory Faucet with 0.5 gpm Aerator
Model: Z6920; Qty: 4

Urinal: Zurn EcoVantage® 0.125 gpf The Pint®
Model: Z5798; Qty: 1

WLC-1: Zurn EcoVantage® 1.28 gpf – ADA Compliant
Model: Z5665; Qty: 2

WLC-2: Zurn EcoVantage® 1.28 gpf
Model: Z5655; Qty: 1

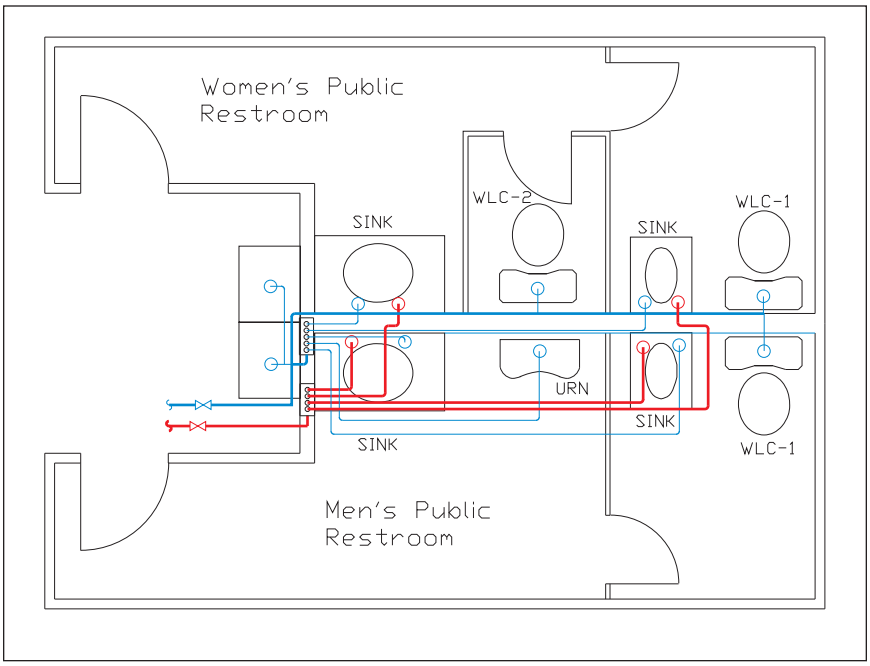

Public Bath Risers

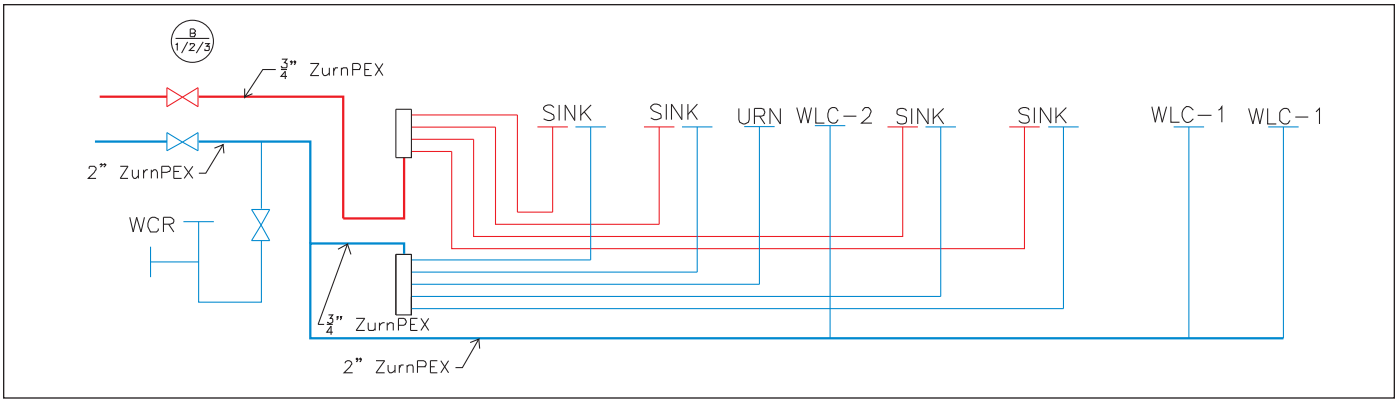

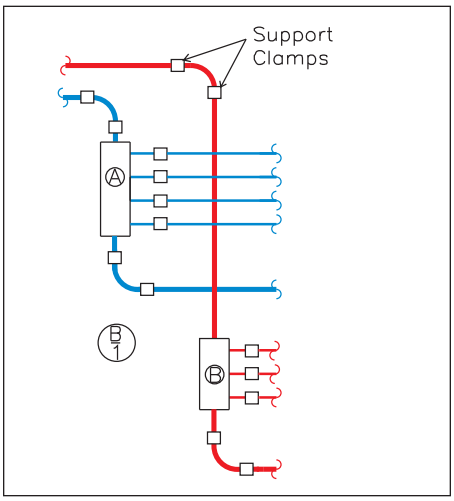

B/1		
A	QPM43-5	CR Manifold - 3/4" Inlet x (5) 1/2" Outlets
B	QPM43-4	CR Manifold - 3/4" Inlet x (4) 1/2" Outlets
A*	QCM43-6GX	Copper Manifold - 3/4" Inlet x (6) 1/2" Outlets
B*	QCM43-4GX	Copper Manifold - 3/4" Inlet x (4) 1/2" Outlets

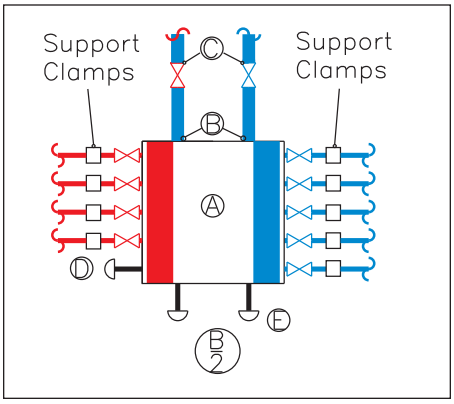

B/2		
A	QPPM10-3	Preassembled QickPort Manifold - 5 Hot, 5 Cold, with 1/2" CR Valves
B	QQPSFC45X	QickPort Inlet Connection - 1" Swivel x 3/4" Barb (CR)
C	QQBV44GX	3/4" x 3/4" Quarter-Turn Low-Lead Brass Ball Valves
D	QTC3FQP	QickPort 1/2" Outlet Cap
E	QTC5FBG	QickPort 1" Outlet Cap

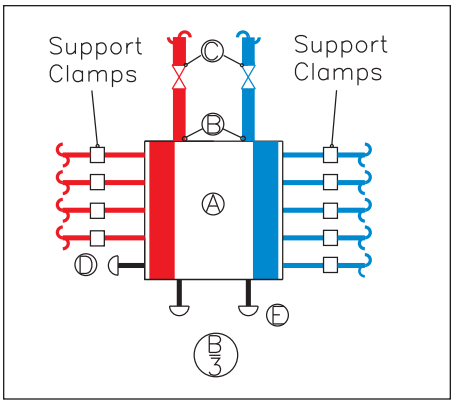

B/3		
A	QPPM10	Preassembled QickPort Manifold - 5 Hot, 5 Cold, No Valves
B	QQPSFC33X	1/2" CR Swivel Adaptors to Connect to QickPort Manifold Outlets
C	QQPSFC45X	QickPort Inlet Connection - 1" Swivel x 3/4" Barb (CR)
D	QQBV44GX	3/4" x 3/4" Quarter-Turn Low-Lead Brass Ball Valve
E	QTC3FQP	QickPort 1/2" Outlet Cap
F	QTC5FBG	QickPort 1" Outlet Cap

Hanging and Supporting Methods

Zurn PEX offers a basic assortment of holding and supporting accessories. There are numerous specialty manufacturers of such products. Within this section are a list of companies and some examples of their hanging and supporting equipment that is suitable for use with Zurn PEX systems. The pictures and devices are not all inclusive but serve as examples. The main points to consider when using supporting and hanging accessories with Zurn PEX tube are the following:

1. The hanger or support should not have any sharp or abrasive edges that could damage the tube. This can be accomplished by using plastic hangers or supports, or metal ones that are plastic coated or have rounded edges.
2. Hangers and supports shall be firm, but loose enough to allow tube to move back and forth as it expands and contracts.
3. Pipe straps should be used to hold pipe in position to prevent strain on fittings.
4. When suspended from the ceiling, tube must be supported every 32" maximum in a horizontal run.
5. If the tube is laying on a horizontal surface, it should be strapped every 6 feet.
6. Vertical runs should be supported at the floor of every floor and at the ceiling of every other floor and shall have a mid-story guide.
7. Protective sleeves or bushings must be used when penetrating a metal stud.

Manufacturers of supporting and hanging accessories (in no particular order):

- Cooper B-Line
- Holdrite®
- Sioux Chief
- PHD Manufacturing

ZURN PEX®, INC.
HIGHWAY 11 EAST · COMMERCE, TX, U.S.A. 75428
PHONE: 903/886-2580 · FAX: 903/886-2583 · www.zurnpex.com

IN CANADA:
ZURN INDUSTRIES LIMITED
3544 NASHUA DRIVE · MISSISSAUGA, ONTARIO, CANADA L4V 1L2
PHONE: 905/405-8272 · FAX: 905/405-1292

Form No. ZPM10234, Rev. 2/11

zurnpex.com