PEERLESS®

PTR188700

PTR188700-UN

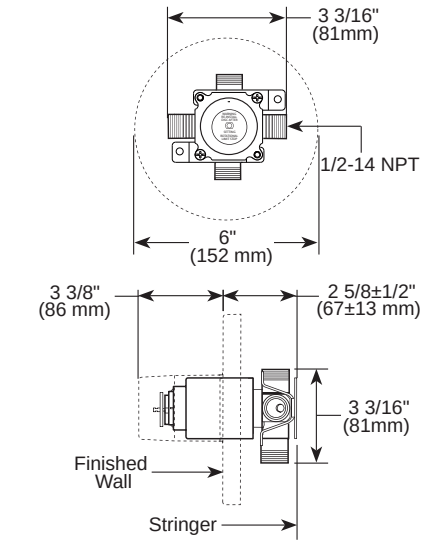

PTR188700-UNWS

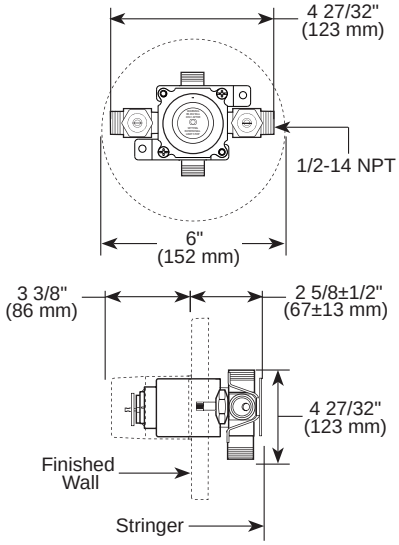

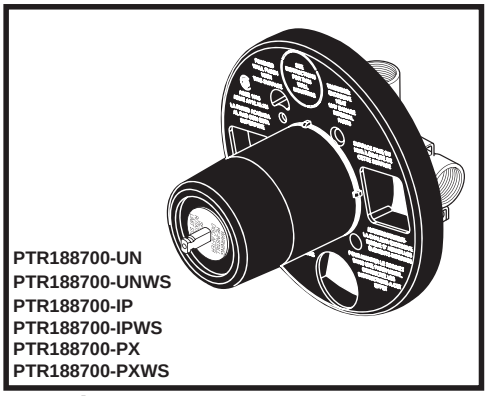

PTR188700-UN
PTR188700-UNWS
PTR188700-IP
PTR188700-IPWS
PTR188700-PX
PTR188700-PXWS

PTR188700-IP

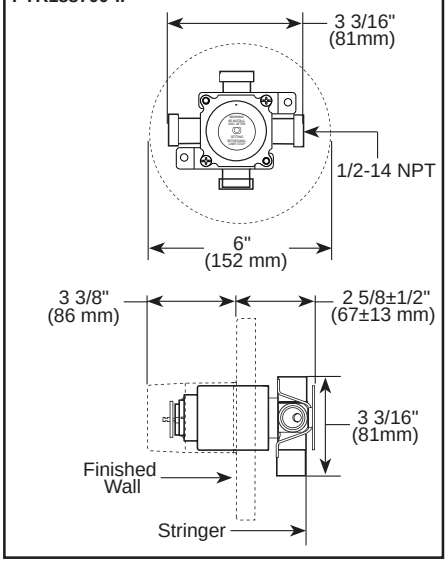

PTR188700-IPWS

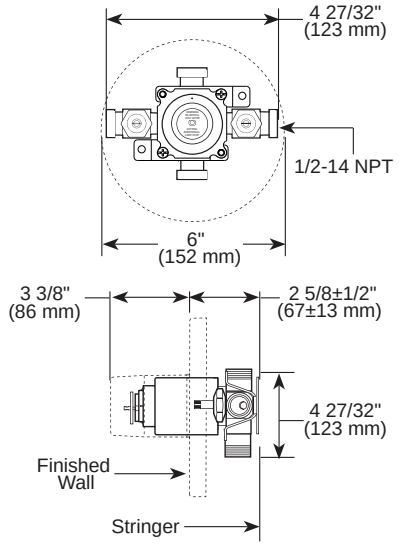

PTR188700-PX

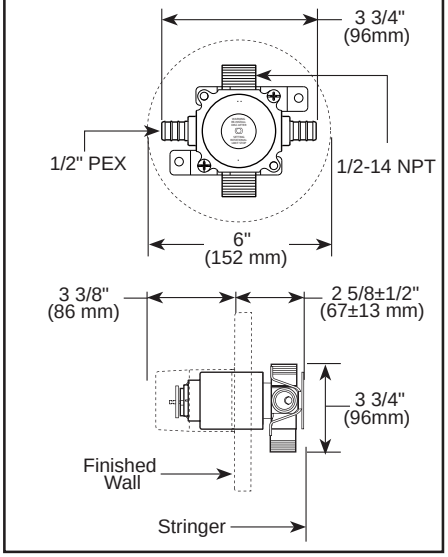

PTR188700-PXWS

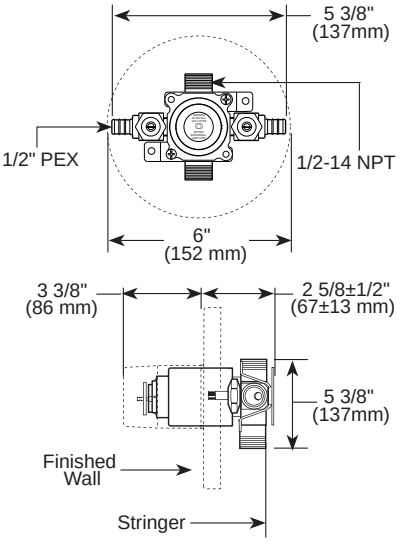

Rough-In:

PTR188700-UN
Male thread without stops
PTR188700-UNWS
Male thread with stops
PTR188700-IP
Female thread without stops
PTR188700-IPWS
Female thread with stops
PTR188700-PX
Male thread outlet, PEX inlet, without stops
PTR188700-PXWS
Male thread outlet, PEX inlet, with stops

STANDARD SPECIFICATIONS:

- Pressure Balance Valve Body.
- Back-to-back installation capability.
- Cartridge utilizes integral check valves to prevent the cross flow of water within the valve. Valve reduces the flow of water to 0.5 GPM within 5 seconds of the complete loss of pressure in the cold water supply line. Outlet water temperature is maintained within ± 3°F variation with changes in either hot or cold supply of up to 50 percent of the normal supply pressure. Temperature is controlled by handle with cold water always coming on first.
- Forged brass body.
- Field adjustable means to limit handle rotation into hot water zone.
- Temperature control to rotate a maximum of 120° from full cold to the maximum temperature.
- Single Handle.
- Temperature Only Controlled with Handle.

WARRANTY:

- Lifetime limited warranty on parts (other than electronic parts and batteries) and finishes; or, for commercial users, for 5 years from the date of purchase.
- 5 year limited warranty on electronic parts (other than batteries); or for commercial users, for 1 year from the date of purchase. No warranty is provided on batteries.

C US

COMPLIES WITH:
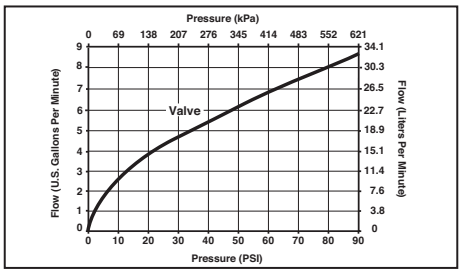
- ASME A112.18.1 / CSA B125.1
- ASSE 1016