RESIDENTIAL
MOLDED WOOD TOILET SEAT

MODEL #	COLOR #
400TTA	_____

DESCRIPTION:

Closed front with cover, round, molded wood, multi-coat enamel finish toilet seat. Features two color-matched bumpers, color-matched Top-Tite® hinges with non-corrosive, top-tightening Hex-Tite™ bolts and wing nuts.

SPECIFICATIONS:

Size:	Round
Material:	Molded Wood
Style:	Closed Front with Cover
Bumpers:	Two
Hinges:	Plastic Top-Tite®
Fastening System:	Non-Corrosive Hex-Tite™ Bolts and Wing Nuts

TOP-TITE® HINGES

NON-CORROSIVE BOLTS AND WING NUTS

FEATURES:

Top-Tite® Hinges

Non-Corrosive Hex-Tite™ Bolts and Wing Nuts

DIMENSIONS:

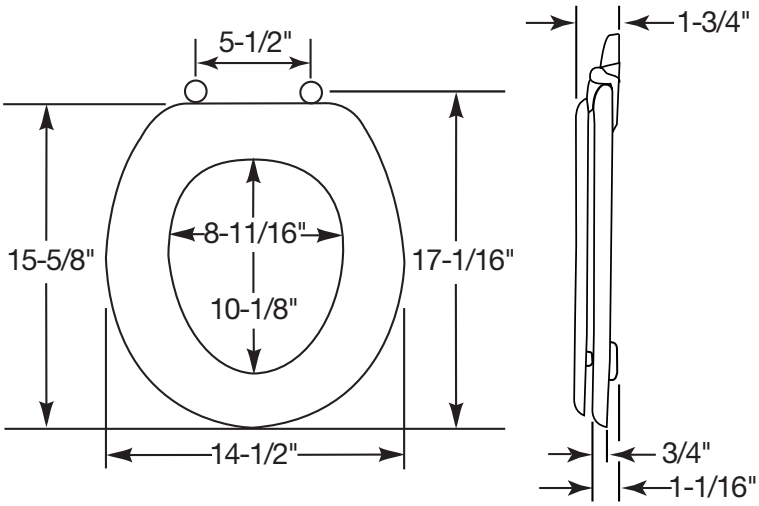

Proudly Made in the USA

Bemis Manufacturing Co., Sheboygan Falls, WI 53085
www.ToiletSeats.com

Phone: 800-558-7651 Fax: 800-292-3647
©2014 0B7012264 REVA