The Petite Altima™

Design | Technology | Innovation

BRIGGS®

The Petite Altima™

20” x 18” Oval
Pedestal Lavatory

6650 / 6652 / 6653

DECOROUS LEG OPTION
AVAILABLE IN WHITE ONLY

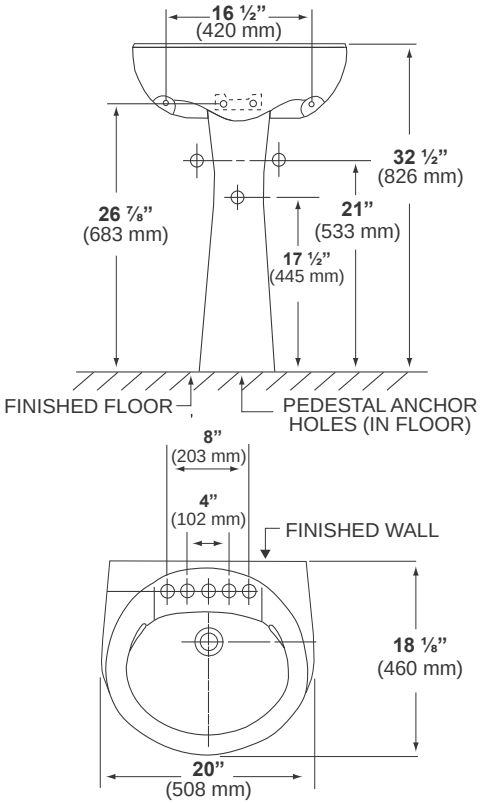

Dimensions may vary (+) or (-) 1/4”. Dimensions shown in parentheses are in millimeters: 25.4 mm = 1 inch. Note: Fixture dimensions are nominal and conform with dimension and performance requirements of ASME/ANSI standards A112.19.2M. PSI rating: 20 minimum to 80 maximum per ASME A112.19.2. Dimensions subject to change or cancellation without notice. Briggs is not responsible for the use of superceded or voided specification information.

Design | Technology | Innovation

splpet1108

FEATURES

- Contemporary design
- Concealed front overflow
- Stain-resistant vitreous china
- 2 convenient soap depressions
- Plumbing concealed in pedestal
- Single hole, 4” or 8” centers available
- Optional decorative leg
- Limited Lifetime warranty

AVAILABLE COLORS

WHITE (130) | BISCUIT (235) | BONE (733)

SPECIFICATIONS

- Model 6653: single hole; consists of lavatory basin (Model 6623), 33 lb, and pedestal leg (Model 6683), 16 lb
- Model 6650: 4” centers; consists of lavatory basin (Model 6624), 33 lb, and pedestal leg (Model 6683), 16 lb
- Model 6652: 8” centers; consists of lavatory basin (Model 6628), 33 lb, and pedestal leg (Model 6683), 16 lb
- 6687: Decorus Leg Option (see inset), white only, 17.3 lb

SUGGESTED FITTINGS*

Sayco™ Faucets	
4” centers	8” centers
432X	482X
500L	482XCB
550X	472X

- See the Sayco® Suggested List Price Guide for available handle kits

*Fittings not included. Refer to the Sayco Catalog for more information.

INSTALLATION

- Installation instructions supplied
- Mounting bracket included for easy installation (Part #B37777)
- Plumber Note: Provide suitable reinforcement for all wall suporrts

BRIGGS®

(800) 888-4458
www.briggsindustries.com